BOM Table							
ITEM NO.	PART NUMBER	Rev.	Description	Material	FlameRating	Color	QTY.
1	WH-04S-01	-	Hinged Nema Enclosure-Indoor Use		UL94-HB		1
1.1	WH-04B-01	-	BASE	ABS	UL94-HB	GRAY	1
1.2	WH-04C-01	-	COVER W/GASKET	ABS	UL94-HB	GRAY	1
1.3	WH-02L-01	-.01	LATCH	PC/PBT	UL94-5VA	GRAY	2
2	WH-90	-	WALL MTG. KIT				1
2.1	WH-90F	-	WALL MTG. FLANGE	STAINLESS STEEL		-	4
2.2	SCREWS-005	-	M4x1.41 X 8mm LG THREAD CUTTING, TRUSS HEAD SCREW	STEEL			4

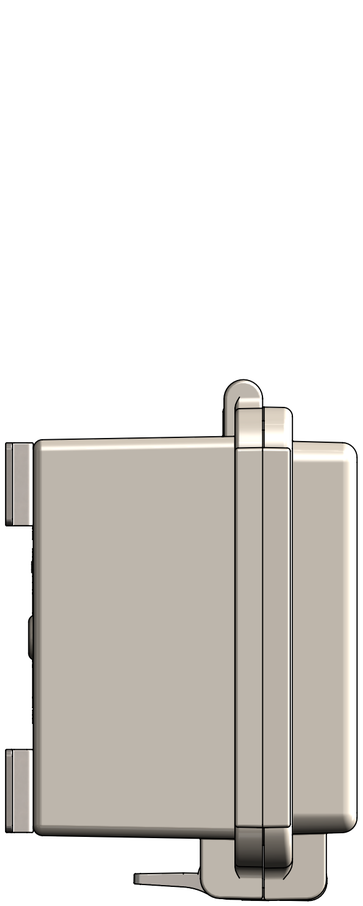

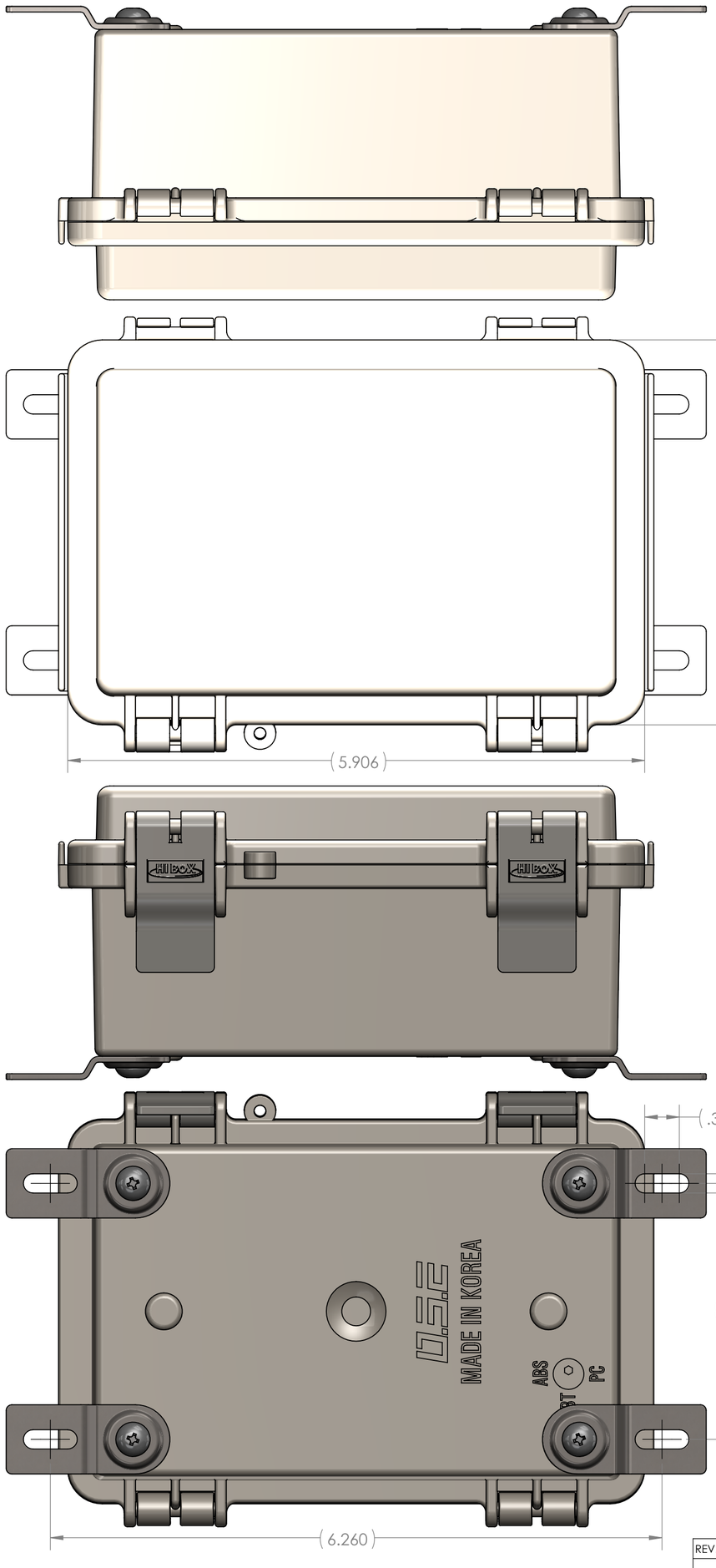

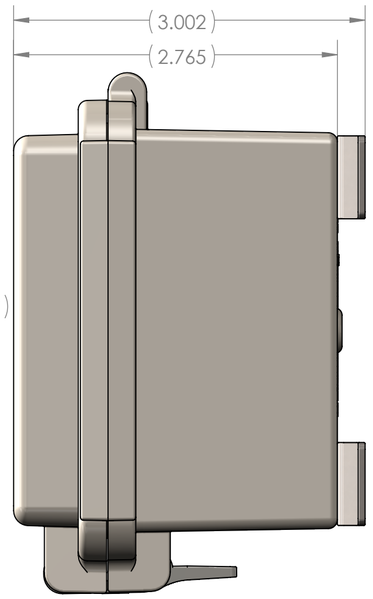

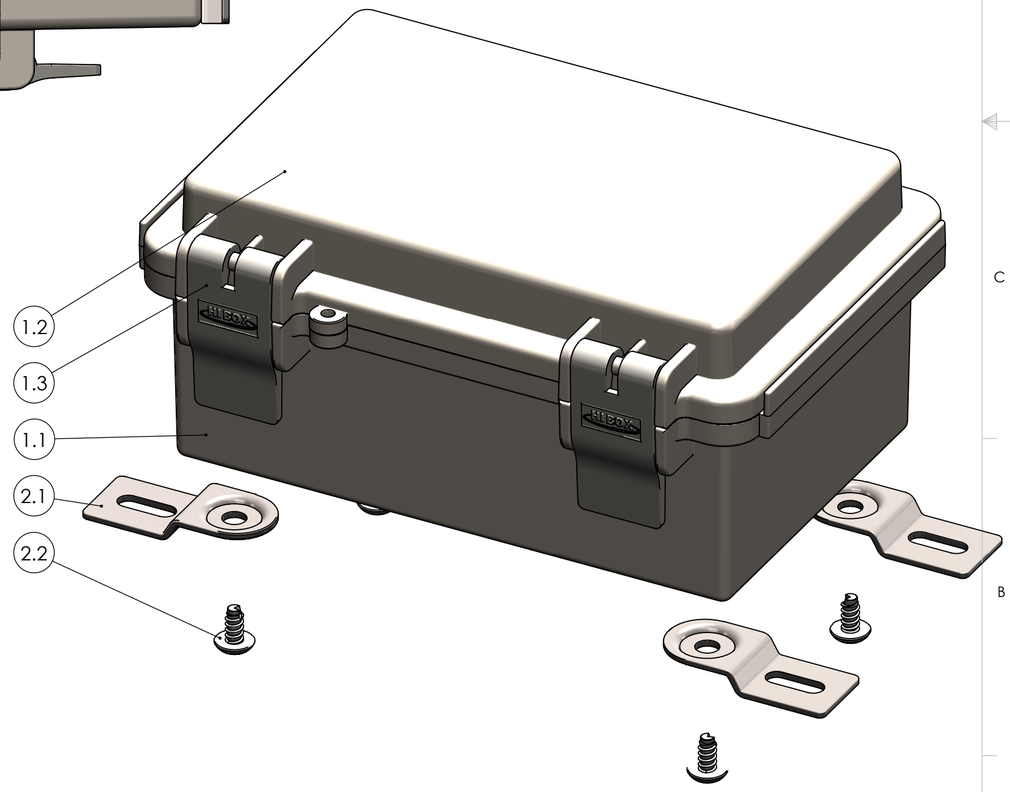

NOTES:
1. FLANGE KIT IS SUPPLIED DISASSEMBLED.

REV.	DESCRIPTION	ZONE	BY	APPR'D	DATE
REVISIONS					

UNLESS OTHERWISE SPECIFIED:
DIMENSIONS ARE IN: INCHES[mm]
TOLERANCES: ANGULAR: ±2°
TWO PLACE DECIMAL: ±.010
THREE PLACE DECIMAL: ±.005
PRINTED GRAPHICS: ±.010

PROPRIETARY AND CONFIDENTIAL
THE INFORMATION CONTAINED IN THIS DRAWING IS THE SOLE PROPERTY OF POLYCASE. ANY REPRODUCTION IN PART OR AS A WHOLE WITHOUT THE WRITTEN PERMISSION OF POLYCASE IS PROHIBITED.

CAD FILE: WH-04-01

PART NO.
WH-04-01

MATERIAL

FLAME RATING

SIZE
C

Hinged Nema Enclosure, Indoor Use, with Flange Kit

REV
-

	NAME	DATE
DRAWN	D.M.F.	2/27/2020
CHECKED	C.C.B.	3/16/2020

SCALE: 1:1

SHEET 1 OF 1

polycase
1305 CHESTER IND. PARKWAY AVON, OHIO 44011-1083 U.S.A.
PH#: 1-800-248-1233, 440-934-0444 FAX#: 440-934-0088

BOM Table							
ITEM NO.	PART NUMBER	Rev.	Description	Material	FlameRating	Color	QTY.
1	WH-04S-02	-	Hinged Nema Enclosure-Outdoor Use		UL94-5VA		1
1.1	WH-04B-02	-	BASE	PC/PBT	UL94-5VA	GRAY	1
1.2	WH-04C-02	-	COVER W/GASKET	PC/PBT	UL94-5VA	GRAY	1
1.3	WH-02L-01	-.01	LATCH	PC/PBT	UL94-5VA	GRAY	2
2	WH-90	-	WALL MTG. KIT				1
2.1	WH-90F	-	WALL MTG. FLANGE	STAINLESS STEEL		-	4
2.2	SCREWS-005	-	M4x1.41 X 8mm LG THREAD CUTTING, TRUSS HEAD SCREW	STEEL			4

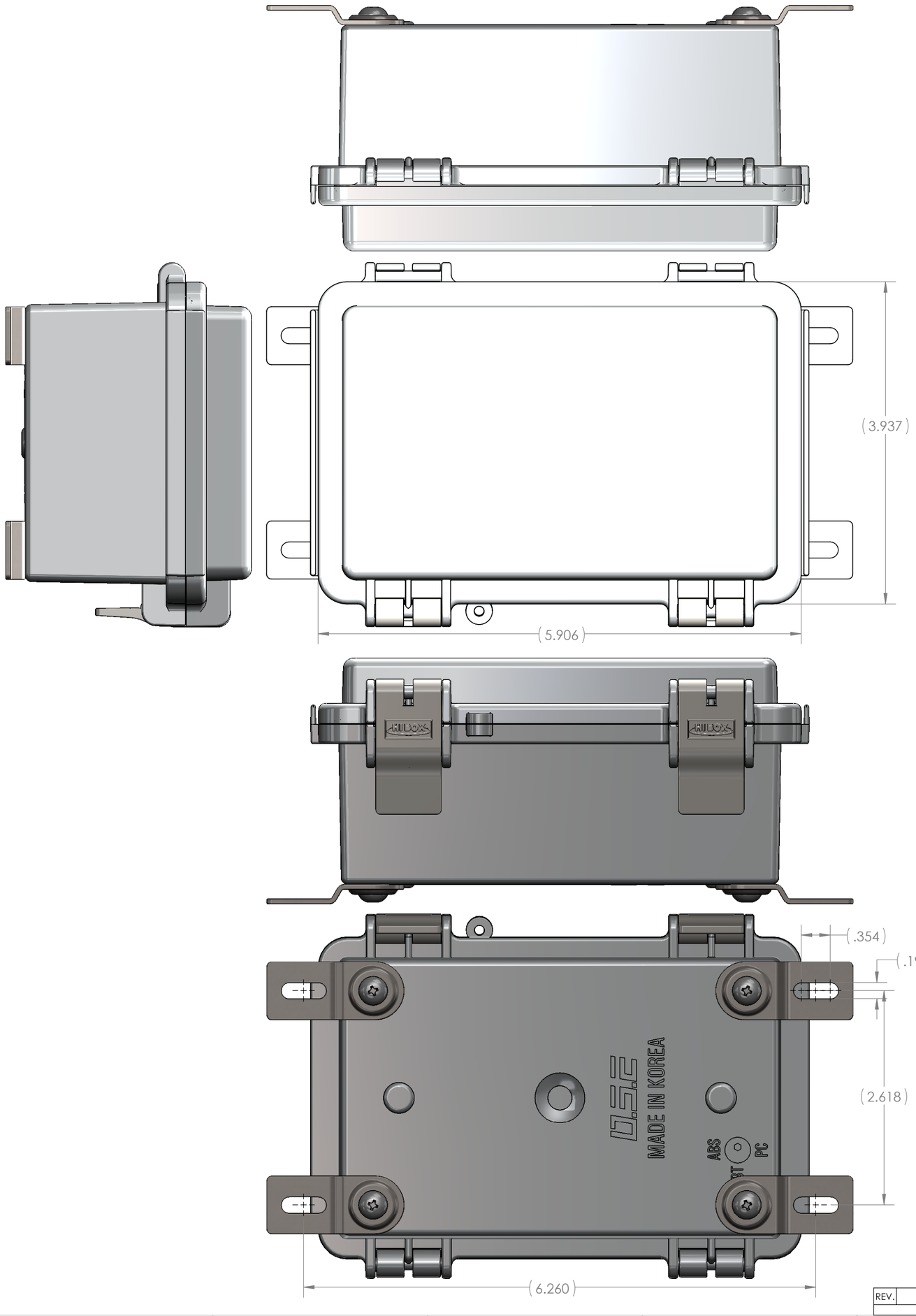

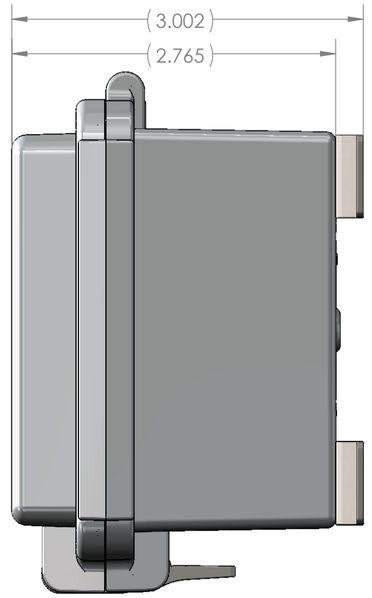

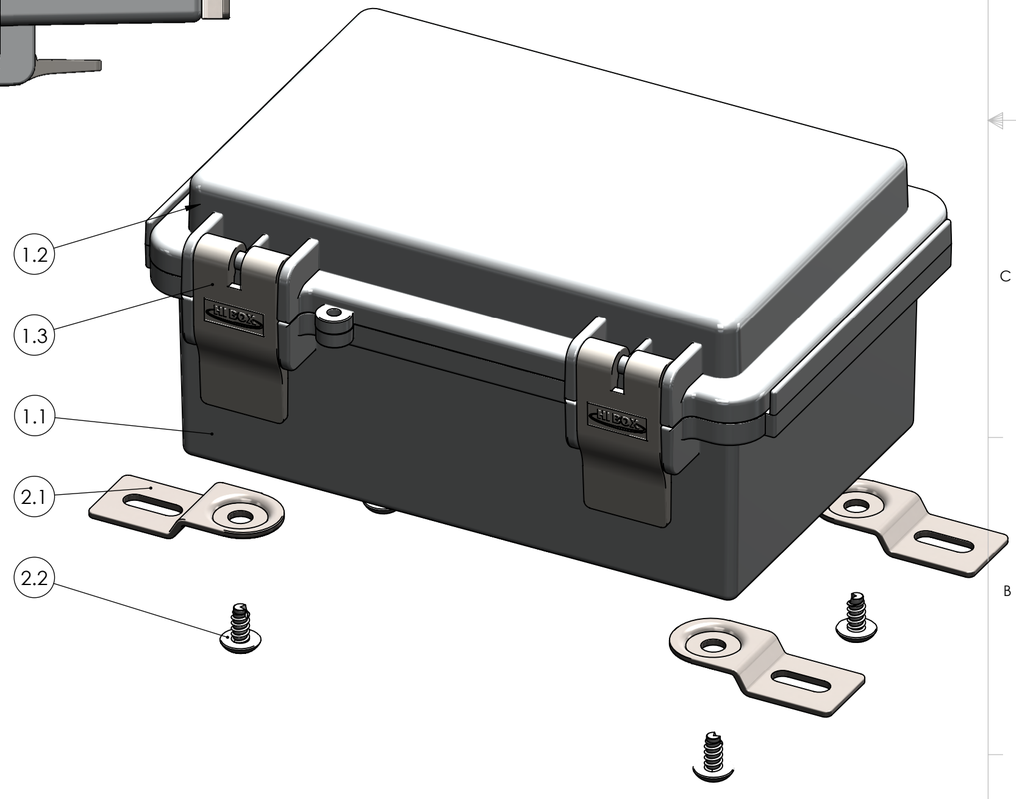

NOTES:
1. FLANGE KIT IS SUPPLIED DISASSEMBLED.

REV.	DESCRIPTION	ZONE	BY	APPR'D	DATE
REVISIONS					

UNLESS OTHERWISE SPECIFIED:
DIMENSIONS ARE IN: INCHES[mm]
TOLERANCES: ANGULAR: ±2°
TWO PLACE DECIMAL: ±.010
THREE PLACE DECIMAL: ±.005
PRINTED GRAPHICS: ±.010

PROPRIETARY AND CONFIDENTIAL
THE INFORMATION CONTAINED IN THIS DRAWING IS THE SOLE PROPERTY OF POLYCASE. ANY REPRODUCTION IN PART OR AS A WHOLE WITHOUT THE WRITTEN PERMISSION OF POLYCASE IS PROHIBITED.

CAD FILE: WH-04-02

PART NO.
WH-04-02

MATERIAL

FLAME RATING

SIZE
C

Hinged Nema Enclosure, Outdoor Use, with Flange Kit

REV
-

	NAME	DATE
DRAWN	D.M.F.	2/27/2020
CHECKED	C.C.B.	3/16/2020

SCALE: 1:1

SHEET 1 OF 1

polycase
1306 CHESTER IND. PARKWAY AVON, OHIO 44011-1083 U.S.A.
PH#: 1-800-248-1233, 440-934-0444 FAX#: 440-934-0088

BOM Table							
ITEM NO.	PART NUMBER	Rev.	Description	Material	FlameRating	Color	QTY.
1	WH-04S-03	-	Hinged Nema Enclosure-Outdoor Use		UL94V-0		1
1.1	WH-04B-02	-	BASE	PC/PBT	UL94-5VA	GRAY	1
1.2	WH-04C-03	-	COVER W/GASKET	PC	UL94V-0	CLEAR	1
1.3	WH-02L-01	-.01	LATCH	PC/PBT	UL94-5VA	GRAY	2
2	WH-90	-	WALL MTG. KIT				1
2.1	WH-90F	-	WALL MTG. FLANGE	STAINLESS STEEL		-	4
2.2	SCREWS-005	-	M4x1.41 X 8mm LG THREAD CUTTING, TRUSS HEAD SCREW	STEEL			4

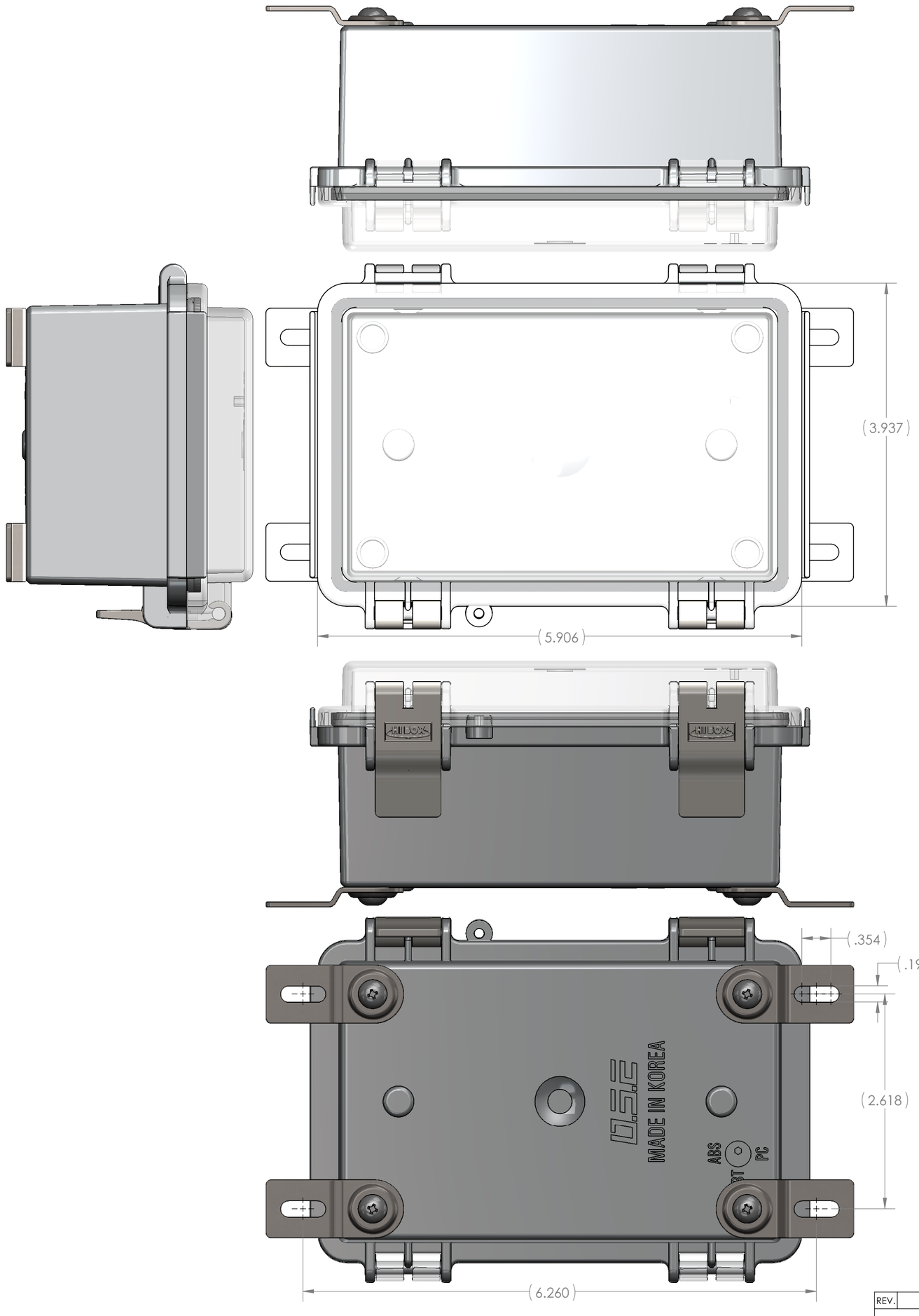

NOTES:
1. FLANGE KIT IS SUPPLIED DISASSEMBLED.

REV.	DESCRIPTION	ZONE	BY	APPR'D	DATE
REVISIONS					

UNLESS OTHERWISE SPECIFIED:
DIMENSIONS ARE IN: INCHES[mm]
TOLERANCES: ANGULAR: ±2°
TWO PLACE DECIMAL: ±.010
THREE PLACE DECIMAL: ±.005
PRINTED GRAPHICS: ±.010

PROPRIETARY AND CONFIDENTIAL
THE INFORMATION CONTAINED IN THIS DRAWING IS THE SOLE PROPERTY OF POLYCASE. ANY REPRODUCTION IN PART OR AS A WHOLE WITHOUT THE WRITTEN PERMISSION OF POLYCASE IS PROHIBITED.
CAD FILE: WH-04-03

PART NO.
WH-04-03

MATERIAL

FLAME RATING

SIZE
C

Hinged Nema Enclosure, Outdoor Use, with Flange Kit

REV
-

	NAME	DATE
DRAWN	D.M.F.	2/27/2020
CHECKED	C.C.B.	3/16/2020

SCALE: 1:1

SHEET 1 OF 1

polycase
1306 CHESTER IND. PARKWAY AVON, OHIO 44011-1083 U.S.A.
PH#: 1-800-248-1233, 440-934-0444 FAX#: 440-934-0088

TOLERANCE CHART																					
DIMENSION RANGE	0	.039	.118	.236	.394	.591	.866	1.181	1.575	2.087	2.756	3.543	4.724	6.299	7.874	9.843	12.402	15.748	19.685	24.803	31.496
	.039	.118	.236	.394	.591	.866	1.181	1.575	2.087	2.756	3.543	4.724	6.299	7.874	9.843	12.402	15.748	19.685	24.803	31.496	39.37
TOOL DEPENDENT	±.007	±.007	±.008	±.008	±.009	±.010	±.011	±.012	±.013	±.015	±.017	±.020	±.024	±.028	±.035	.043	.051	.063	.079	.098	.118
NON-TOOL DEPENDENT	±.003	±.004	±.004	±.004	±.005	±.006	±.007	±.008	±.009	±.011	±.013	±.016	±.020	±.024	±.031	.039	.047	.059	.075	.094	.114

BOM Table								
ITEM NO.	PART NUMBER	Rev.	Description	Material	Flame Rating	Outdoor Suitability	Color	QTY.
1	WH-04B-01	-	BASE	ABS	UL94-HB		GRAY	1
2	WH-04C-01	-	COVER W/GASKET	ABS	UL94-HB		GRAY	1
3	WH-02L-01	-.01	LATCH	PC/PBT	UL94-5VA	UL746C F1	GRAY	2

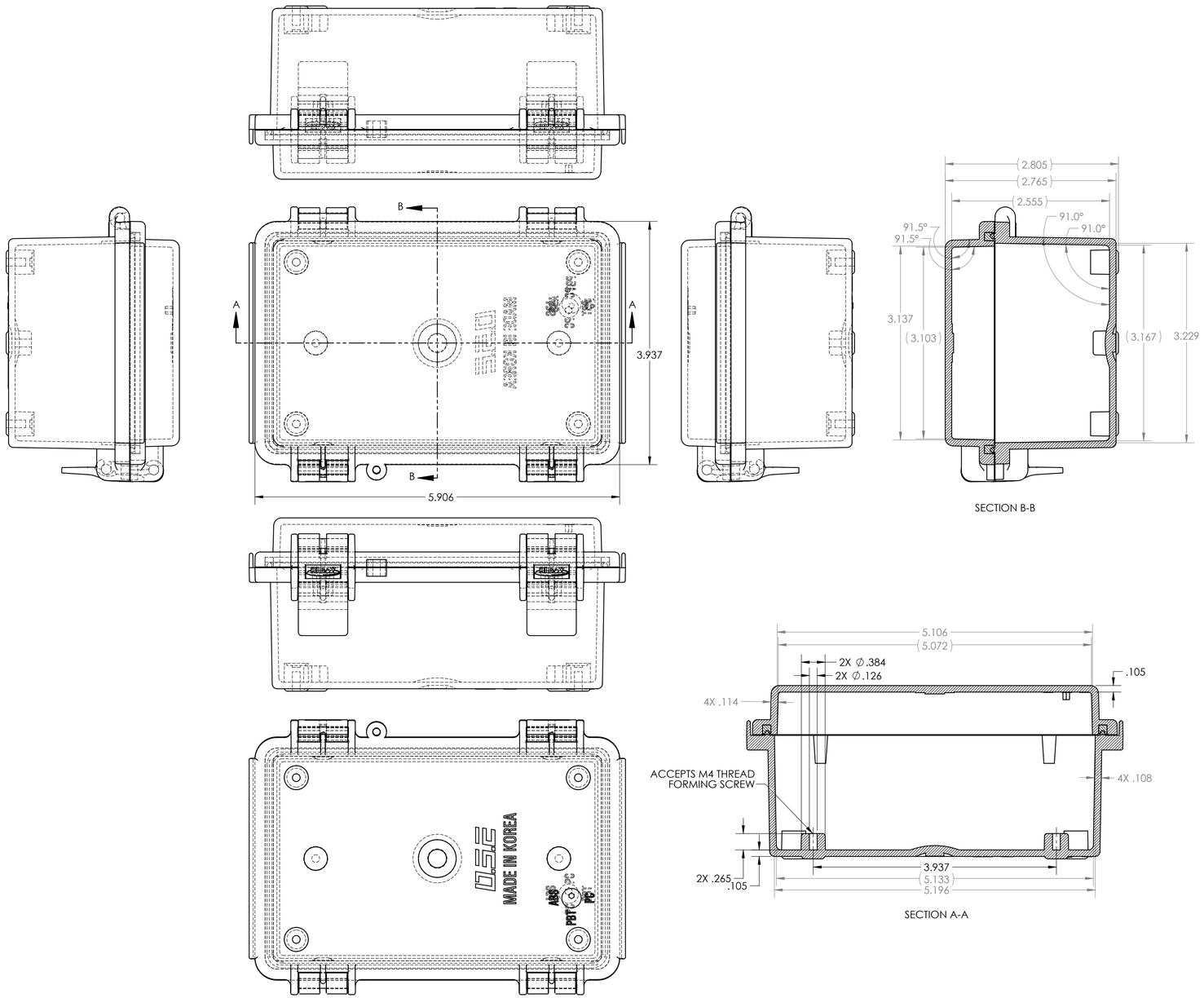

SECTION B-B

SECTION A-A

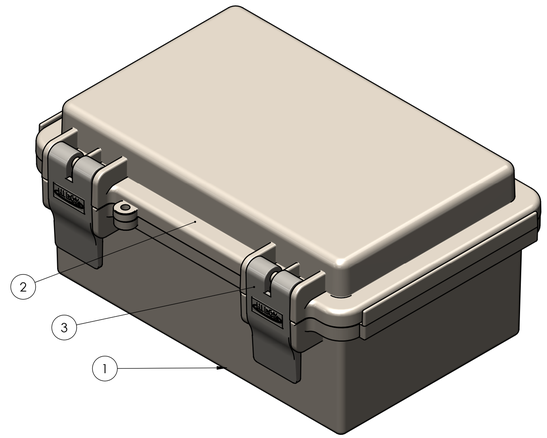

CONTINUOUS OPERATING TEMP: -40°C to 60°C/-40°F to 140°F

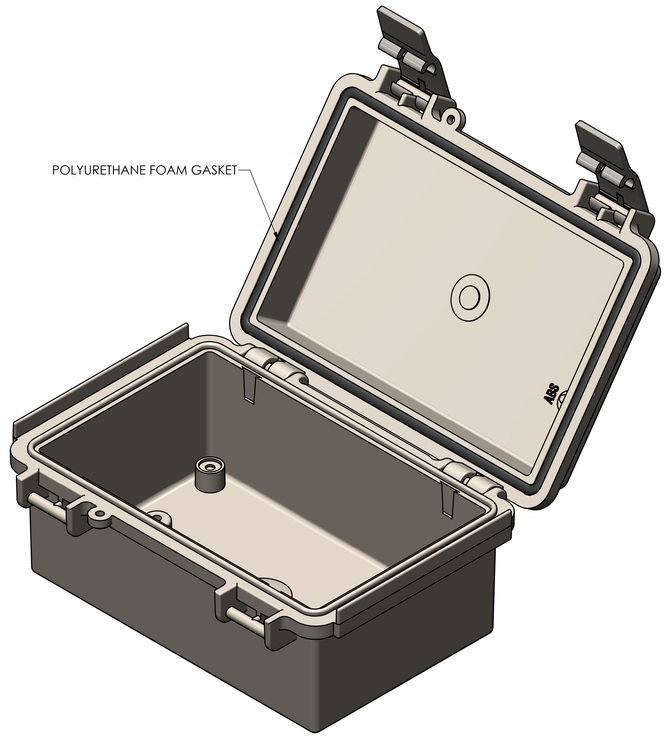

REV.	DESCRIPTION	ZONE	BY	APPR'D	DATE
REVISIONS					

UNLESS OTHERWISE SPECIFIED:
DIMENSIONS ARE IN: INCHES[mm]
TOLERANCES: ANGULAR: ±.°
TWO PLACE DECIMAL: ±.
THREE PLACE DECIMAL: ±.
PRINTED GRAPHICS: ±.

PROPRIETARY AND CONFIDENTIAL
THE INFORMATION CONTAINED IN THIS DRAWING IS THE SOLE PROPERTY OF POLYCASE. ANY REPRODUCTION IN PART OR AS A WHOLE WITHOUT THE WRITTEN PERMISSION OF POLYCASE IS PROHIBITED.

CAD FILE: WH-04S-01

PART NO.
WH-04S-01
MATERIAL

FLAME RATING
UL94-HB

	NAME	DATE
DRAWN	D.M.F.	2/27/2020
CHECKED	C.C.B.	3/16/2020

polycase
1300 CHESTER RD. FAIRWAY AVON, OHIO 44011-1083 U.S.A.
PH: 1-800-348-1222, 440-934-5444 FAX: 440-934-0088

SIZE D
Hinged Nema Enclosure-Indoor Use
REV -
SCALE: 1:1
SHEET 1 OF 1

REV -
D WH-04S-01

TOLERANCE CHART																					
DIMENSION RANGE	0	.039	.118	.236	.394	.591	.866	1.181	1.575	2.087	2.756	3.543	4.724	6.299	7.874	9.843	12.402	15.748	19.685	24.803	31.496
	.039	.118	.236	.394	.591	.866	1.181	1.575	2.087	2.756	3.543	4.724	6.299	7.874	9.843	12.402	15.748	19.685	24.803	31.496	39.37
TOOL DEPENDENT	±.007	±.007	±.008	±.008	±.009	±.010	±.011	±.012	±.013	±.015	±.017	±.020	±.024	±.028	±.035	.043	.051	.063	.079	.098	.118
NON-TOOL DEPENDENT	±.003	±.004	±.004	±.004	±.005	±.006	±.007	±.008	±.009	±.011	±.013	±.016	±.020	±.024	±.031	.039	.047	.059	.075	.094	.114

BOM Table								
ITEM NO.	PART NUMBER	Rev.	Description	Material	Flame Rating	Outdoor Suitability	Color	QTY.
1	WH-04B-02	-	BASE	PC/PBT	UL94-5VA	UL746C F1	GRAY	1
2	WH-04C-02	-	COVER W/GASKET	PC/PBT	UL94-5VA	UL746C F1	GRAY	1
3	WH-02L-01	-.01	LATCH	PC/PBT	UL94-5VA	UL746C F1	GRAY	2

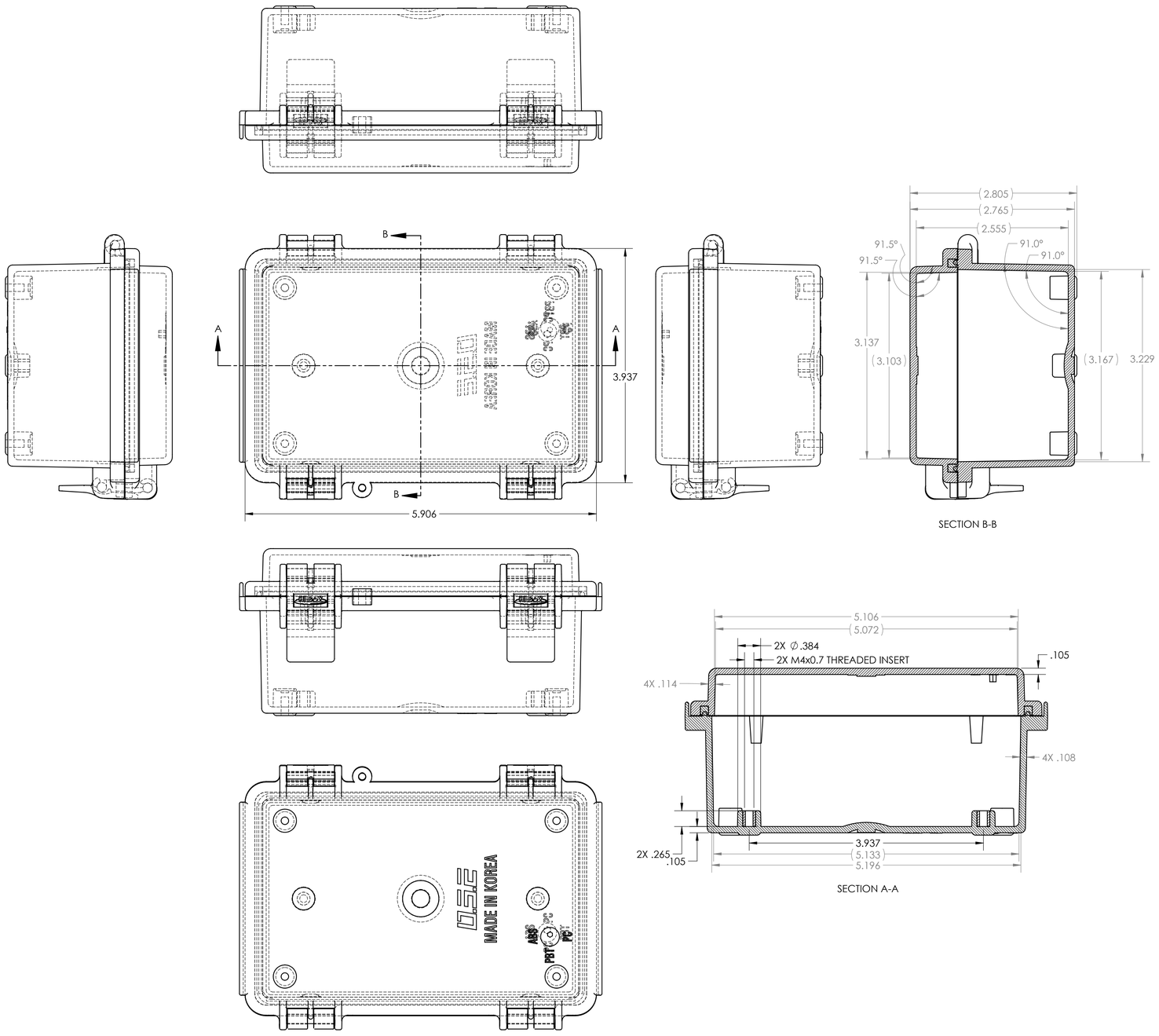

SECTION B-B

SECTION A-A

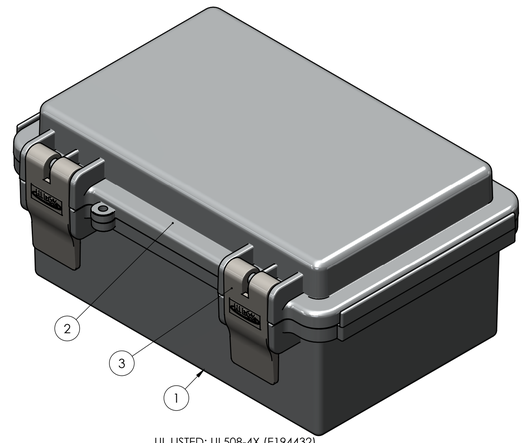

UL LISTED: UL508-4X (E194432)
CONTINUOUS OPERATING TEMP: -40°C to 75°C/-40°F to 167°F

REV.	DESCRIPTION	ZONE	BY	APPR'D	DATE
REVISIONS					

UNLESS OTHERWISE SPECIFIED:
DIMENSIONS ARE IN: INCHES[mm]
TOLERANCES: ANGULAR: ±.°
TWO PLACE DECIMAL: ±.
THREE PLACE DECIMAL: ±.
PRINTED GRAPHICS: ±.
PROPRIETARY AND CONFIDENTIAL
THE INFORMATION CONTAINED IN THIS DRAWING IS THE SOLE PROPERTY OF POLYCASE. ANY REPRODUCTION IN PART OR AS A WHOLE WITHOUT THE WRITTEN PERMISSION OF POLYCASE IS PROHIBITED.
CAD FILE: WH-04S-02

PART NO.
WH-04S-02
MATERIAL

FLAME RATING
UL94-5VA

	NAME	DATE
DRAWN	D.M.F.	2/27/2020
CHECKED	C.C.B.	3/16/2020

polycase
1300 CHESTER RD. FAIRMAN AVON, OHIO 44011-1083 U.S.A.
PHX 1-800-240-1222, 440-934-5444 FAX# 440-934-0088

SIZE D
Hinged Nema Enclosure-Outdoor Use
REV -
SCALE: 1:1
SHEET 1 OF 1

REV -
D WH-04S-02

TOLERANCE CHART																					
DIMENSION RANGE	0	.039	.118	.236	.394	.591	.866	1.181	1.575	2.087	2.756	3.543	4.724	6.299	7.874	9.843	12.402	15.748	19.685	24.803	31.496
	.039	.118	.236	.394	.591	.866	1.181	1.575	2.087	2.756	3.543	4.724	6.299	7.874	9.843	12.402	15.748	19.685	24.803	31.496	39.37
TOOL DEPENDENT	±.007	±.007	±.008	±.008	±.009	±.010	±.011	±.012	±.013	±.015	±.017	±.020	±.024	±.028	±.035	.043	.051	.063	.079	.098	.118
NON-TOOL DEPENDENT	±.003	±.004	±.004	±.004	±.005	±.006	±.007	±.008	±.009	±.011	±.013	±.016	±.020	±.024	±.031	.039	.047	.059	.075	.094	.114

BOM Table								
ITEM NO.	PART NUMBER	Rev.	Description	Material	Flame Rating	Outdoor Suitability	Color	QTY.
1	WH-04B-02	-	BASE	PC/PBT	UL94-5VA	UL746C F1	GRAY	1
2	WH-04C-03	-	COVER W/GASKET	PC	UL94V-0	UL746C F1	CLEAR	1
3	WH-02L-01	-.01	LATCH	PC/PBT	UL94-5VA	UL746C F1	GRAY	2

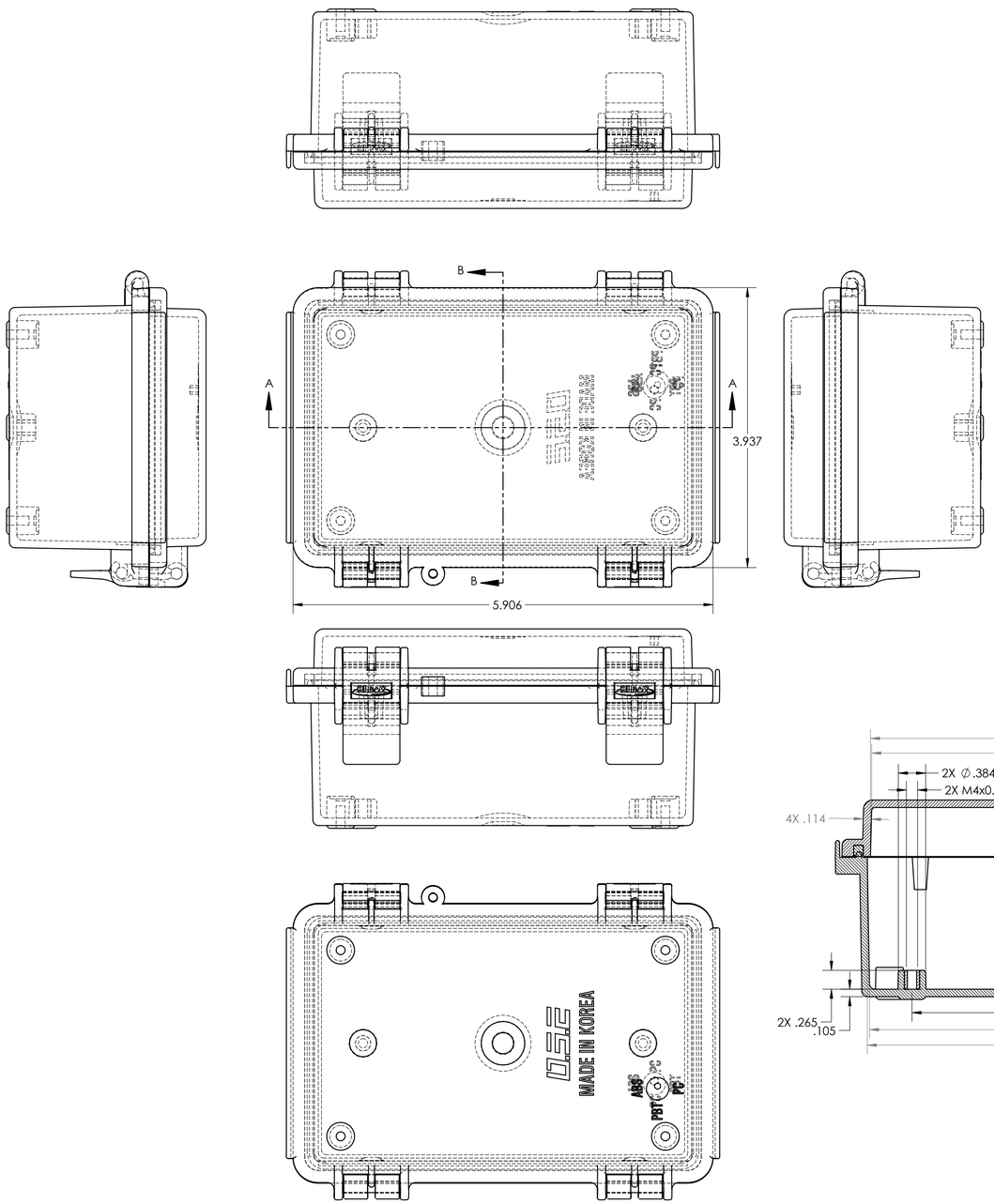

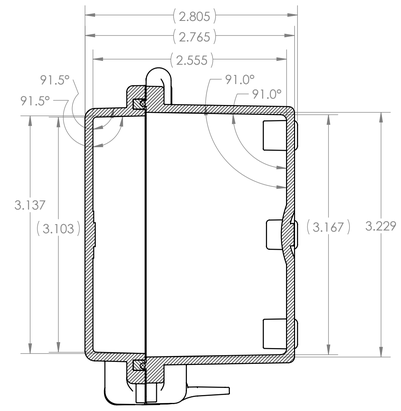

SECTION B-B

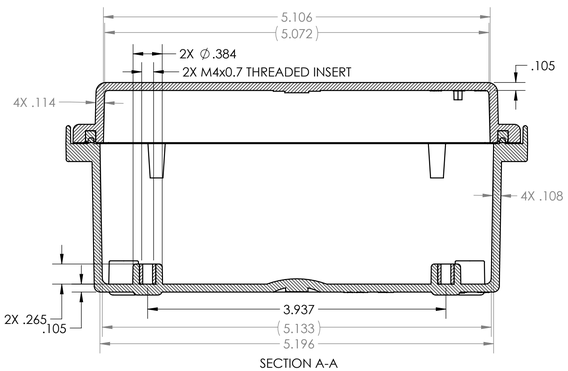

SECTION A-A

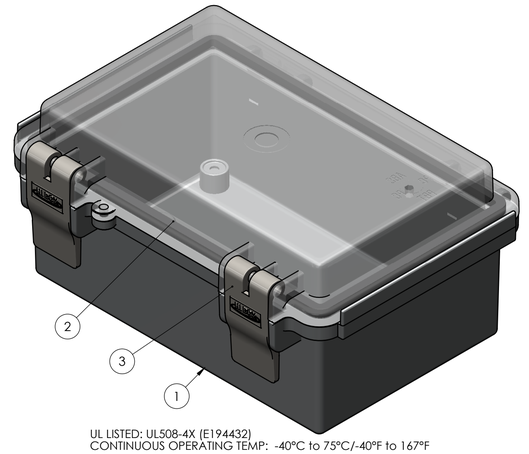

UL LISTED: UL508-4X (E194432)
CONTINUOUS OPERATING TEMP: -40°C to 75°C/-40°F to 167°F

REV.	DESCRIPTION	ZONE	BY	APPR'D	DATE
REVISIONS					

UNLESS OTHERWISE SPECIFIED:
DIMENSIONS ARE IN: INCHES[mm]
TOLERANCES: ANGULAR: ±.°
TWO PLACE DECIMAL: ±.
THREE PLACE DECIMAL: ±.
PRINTED GRAPHICS: ±.
PROPRIETARY AND CONFIDENTIAL
THE INFORMATION CONTAINED IN THIS DRAWING IS THE SOLE PROPERTY OF POLYCASE. ANY REPRODUCTION IN PART OR AS A WHOLE WITHOUT THE WRITTEN PERMISSION OF POLYCASE IS PROHIBITED.
CAD FILE: WH-04S-03

PART NO.
WH-04S-03
MATERIAL

FLAME RATING
UL94V-0

	NAME	DATE
DRAWN	D.M.F.	2/27/2020
CHECKED	C.C.B.	3/16/2020

polycase
1300 CHESTER RD. FAIRWAY AVON, OHIO 44011-1383 U.S.A.
PHX 1-800-348-1233, 440-934-9444 FAX# 440-934-0088

SIZE D
Hinged Nema Enclosure-Outdoor Use
REV -
SCALE: 1:1
SHEET 1 OF 1

REV D WH-04S-03