BOM Table							
ITEM NO.	PART NUMBER	Rev.	Description	Material	Color	AN-15F-01/QTY.	AN-15F-02/QTY.
1	AN-15BF-01	-	ALUMINUM NEMA BASE	ALUMINUM ADC12	NATURAL	1	-
2	AN-15C-01	-	COVER	ALUMINUM ADC12	NATURAL	1	-
3	AN-15BF-02	-	ALUMINUM NEMA BASE	ALUMINUM ADC12	BLACK	-	1
4	AN-15C-02	-	COVER	ALUMINUM ADC12	BLACK	-	1
5	SCREWS-034-4	-	M4X0.7 X 20mm FHMS 4-PACK			1	1
6	GASKET-115-01	-	GASKET	SILICONE	GRAY	1	1

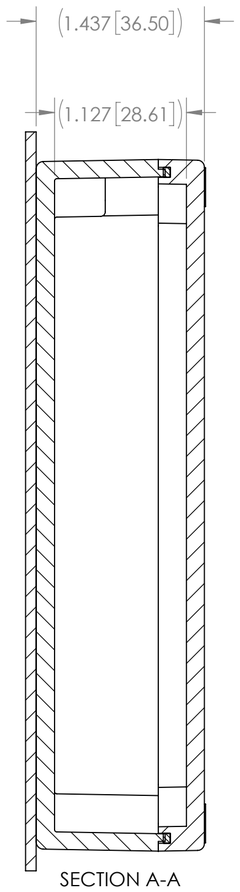

SECTION A-A

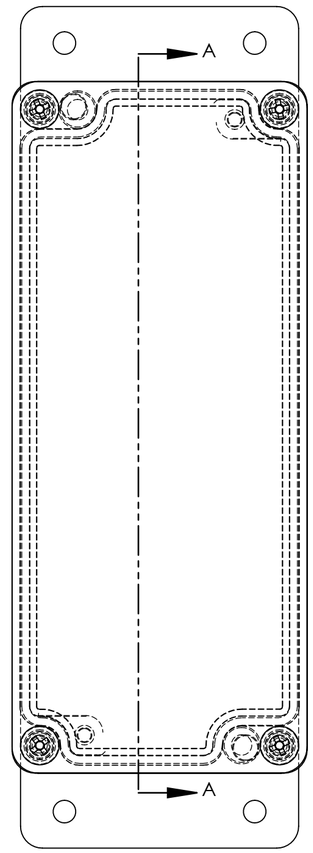

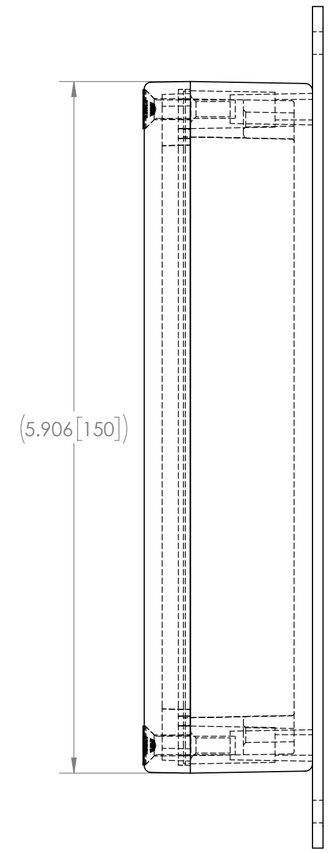

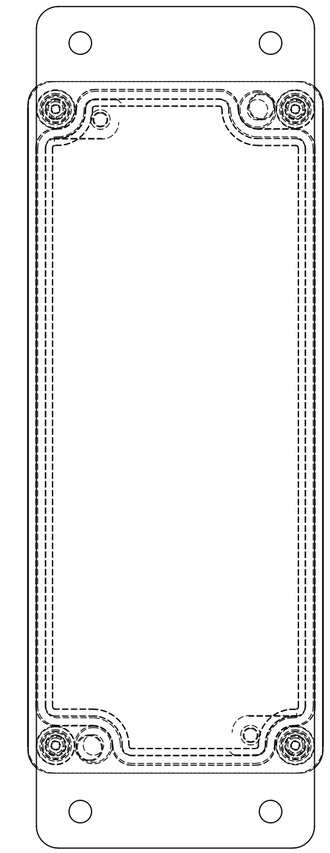

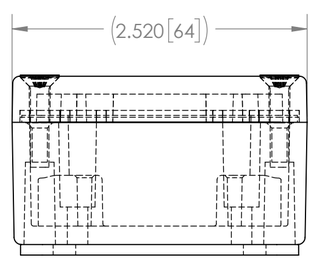

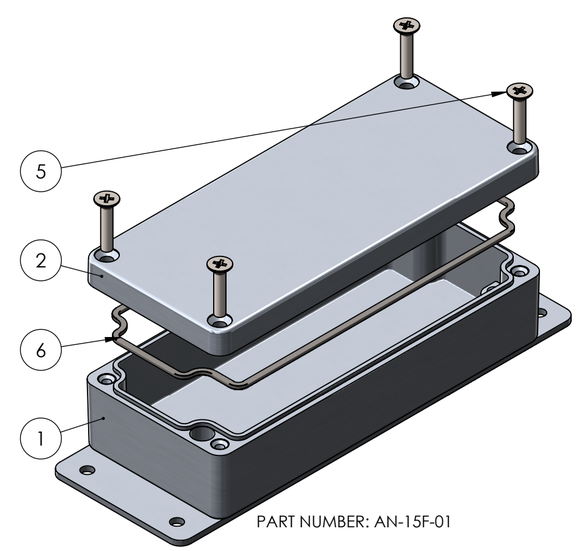

PART NUMBER: AN-15F-01

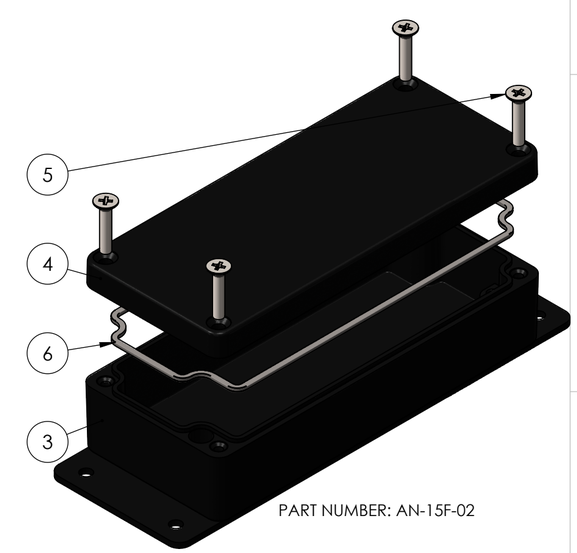

PART NUMBER: AN-15F-02

UNLESS OTHERWISE SPECIFIED:
DIMENSIONS ARE IN: INCHES[mm]
TOLERANCES: ANGULAR: ±2°
TWO PLACE DECIMAL: ±.010
THREE PLACE DECIMAL: ±.005
PRINTED GRAPHICS: ±.010

PROPRIETARY AND CONFIDENTIAL
THE INFORMATION CONTAINED IN THIS DRAWING IS THE SOLE PROPERTY OF POLYCASE. ANY REPRODUCTION IN PART OR AS A WHOLE WITHOUT THE WRITTEN PERMISSION OF POLYCASE IS PROHIBITED.

CAD FILE: AN-15F

PART NO.
AS NOTED

MATERIAL
AS NOTED

FLAME RATING
-

SIZE
C

REV
-

	NAME	DATE
DRAWN	D.M.F.	5/3/2018
CHECKED	C.C.B.	5/8/2018

SCALE: 1:1

SHEET 1 OF 1

polycase
1305 CHESTER IND. PARKWAY AVON, OHIO 44011-1083 U.S.A.
PH#: 1-800-248-1233, 440-934-0444 FAX#: 440-934-0088

REV.	DESCRIPTION	ZONE	BY	APPR'D	DATE
	REVISIONS				

TOLERANCE CHART															
DIMENSION RANGE	0	.039	.118	.236	.394	.591	.866	1.181	1.575	2.087	2.756	3.543	4.724	6.299	7.874
	.039	.118	.236	.394	.591	.866	1.181	1.575	2.087	2.756	3.543	4.724	6.299	7.874	9.843
TOOL DEPENDENT	±.007	±.007	±.008	±.008	±.009	±.010	±.011	±.012	±.013	±.015	±.017	±.020	±.024	±.028	±.035
NON-TOOL DEPENDENT	±.003	±.004	±.004	±.004	±.005	±.006	±.007	±.008	±.009	±.011	±.013	±.016	±.020	±.024	±.031

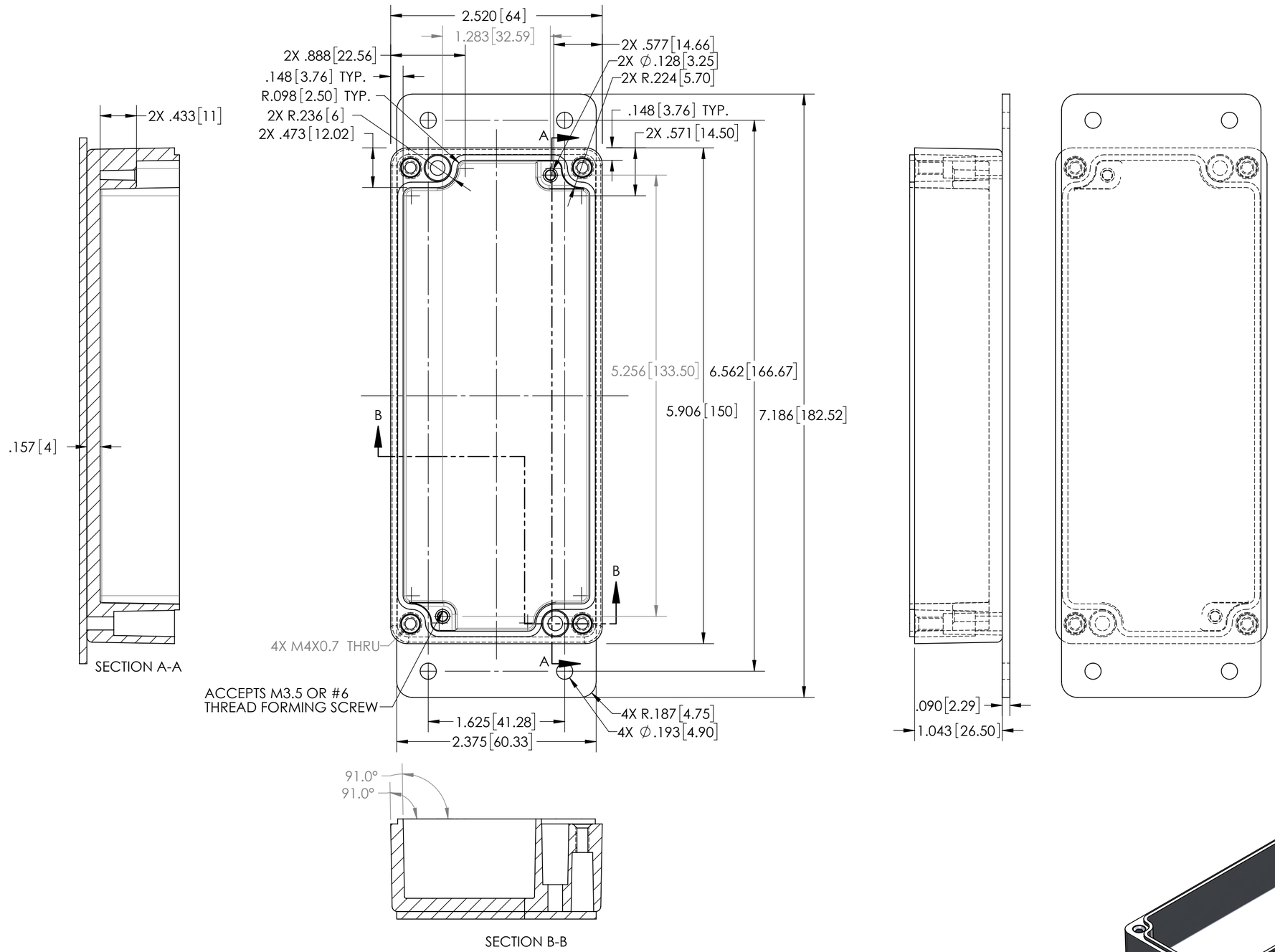

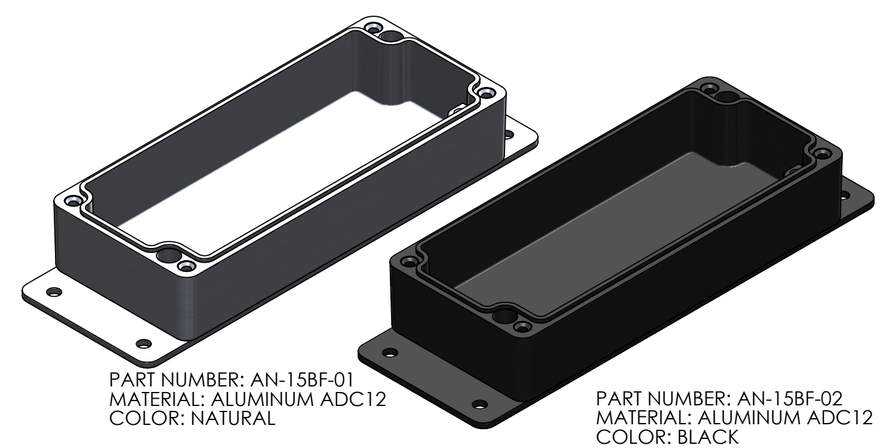

PART NUMBER: AN-15BF-01
MATERIAL: ALUMINUM ADC12
COLOR: NATURAL

PART NUMBER: AN-15BF-02
MATERIAL: ALUMINUM ADC12
COLOR: BLACK

UNLESS OTHERWISE SPECIFIED:
DIMENSIONS ARE IN: INCHES[mm]
TOLERANCES: ANGULAR: ±.5°
TWO PLACE DECIMAL: ±-
THREE PLACE DECIMAL: ±-
PRINTED GRAPHICS: ±.010

PROPRIETARY AND CONFIDENTIAL
THE INFORMATION CONTAINED IN THIS DRAWING IS THE SOLE PROPERTY OF POLYCASE. ANY REPRODUCTION IN PART OR AS A WHOLE WITHOUT THE WRITTEN PERMISSION OF POLYCASE IS PROHIBITED.

CAD FILE: AN-15BF

PART NO.
AS NOTED

MATERIAL
AS NOTED

FLAME RATING
-

SIZE
C

REV
-

	NAME	DATE
DRAWN	D.M.F.	5/3/2018
CHECKED	C.C.B.	5/8/2018

SCALE: 1:1

SHEET 1 OF 1

polycase
1305 CHESTER IND. PARKWAY AVON, OHIO 44011-1083 U.S.A.
PH#: 1-800-248-1233, 440-934-0444 FAX#: 440-934-0088

REV.	DESCRIPTION	ZONE	BY	APPR'D	DATE
	REVISIONS				

TOLERANCE CHART													
DIMENSION RANGE	0	.039	.118	.236	.394	.591	.866	1.181	1.575	2.087	2.756	3.543	4.724
	.039	.118	.236	.394	.591	.866	1.181	1.575	2.087	2.756	3.543	4.724	6.299
TOOL DEPENDENT	±.007	±.007	±.008	±.008	±.009	±.010	±.011	±.012	±.013	±.015	±.017	±.020	±.024
NON-TOOL DEPENDENT	±.003	±.004	±.004	±.004	±.005	±.006	±.007	±.008	±.009	±.011	±.013	±.016	±.020

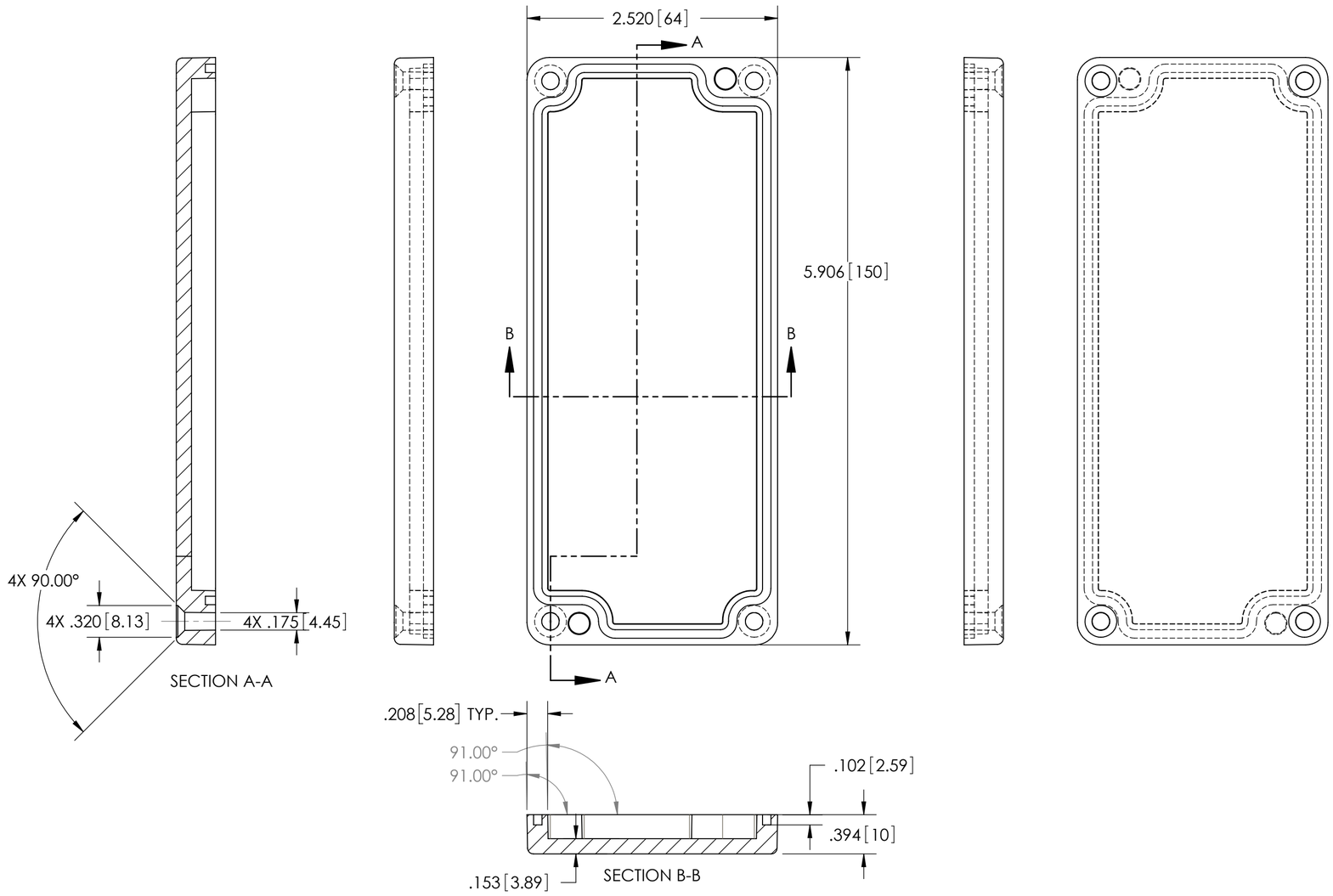

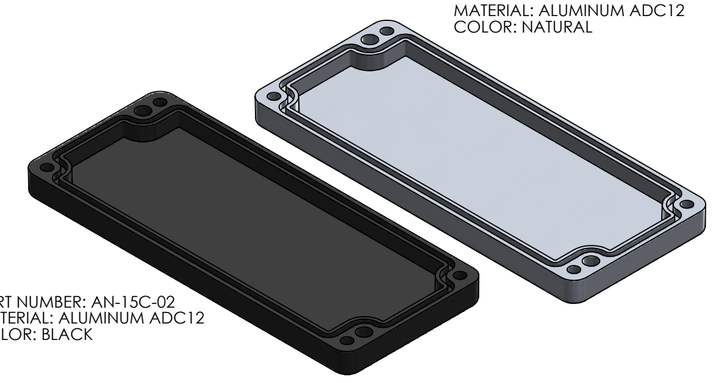

REV.	DESCRIPTION	ZONE	BY	APPR'D	DATE
	REVISIONS				

UNLESS OTHERWISE SPECIFIED:
DIMENSIONS ARE IN: INCHES[mm]
TOLERANCES: ANGULAR: ±.5°
TWO PLACE DECIMAL: ±-
THREE PLACE DECIMAL: ±-
PRINTED GRAPHICS: ±.010

PROPRIETARY AND CONFIDENTIAL
THE INFORMATION CONTAINED IN THIS DRAWING IS THE SOLE PROPERTY OF POLYCASE. ANY REPRODUCTION IN PART OR AS A WHOLE WITHOUT THE WRITTEN PERMISSION OF POLYCASE IS PROHIBITED.

CAD FILE: AN-15C

PART NO.
AS NOTED

MATERIAL
AS NOTED

FLAME RATING
-

	NAME	DATE
DRAWN	D.M.F.	11/15/2016
CHECKED	C.C.B.	12/27/2016

SIZE
C

SCALE: 1:1

polycase
1305 CHESTER IND. PARKWAY AVON, OHIO 44011-1083 U.S.A.
PH#: 1-800-248-1233, 440-934-0444 FAX#: 440-934-0088

COVER

REV
-

SHEET 1 OF 1