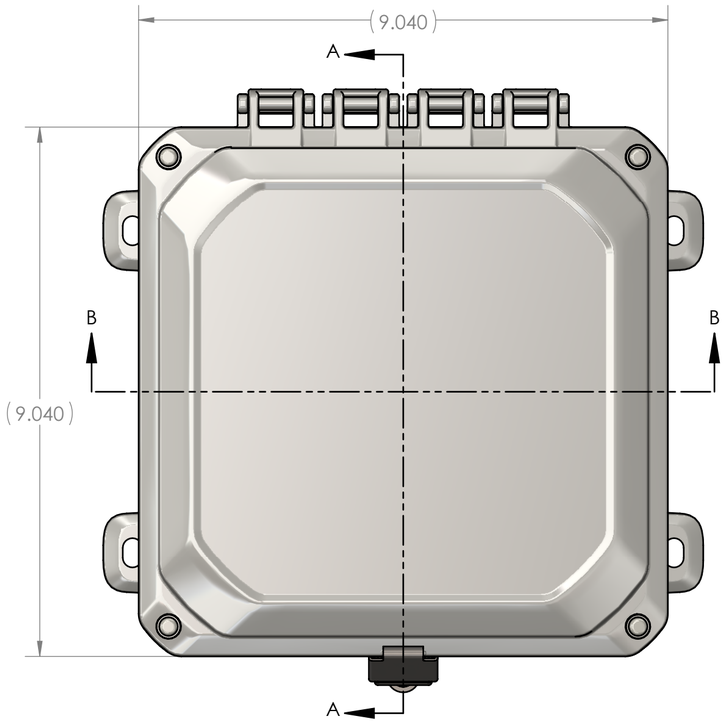

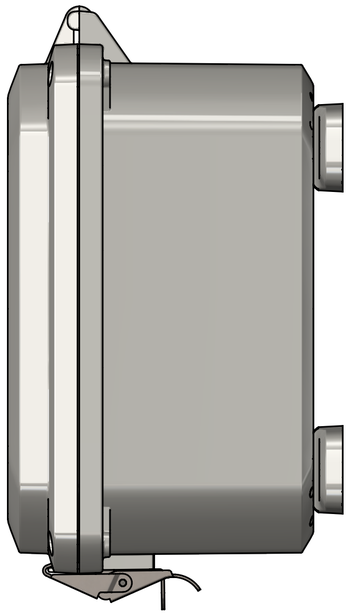

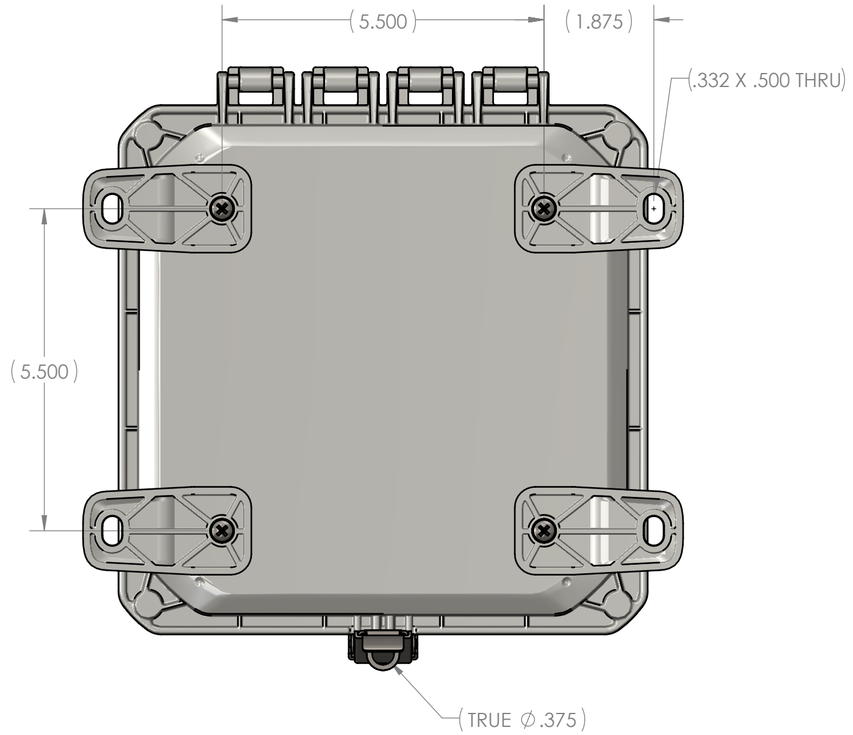

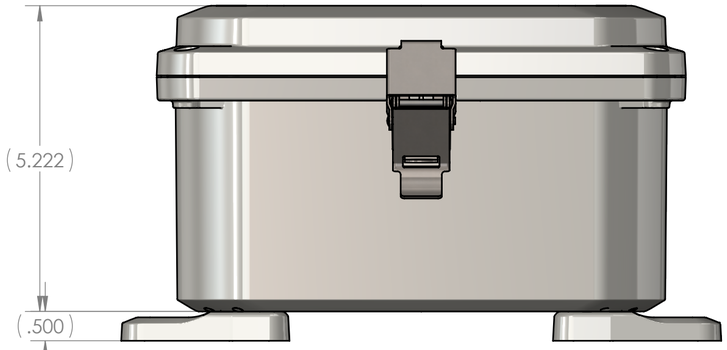

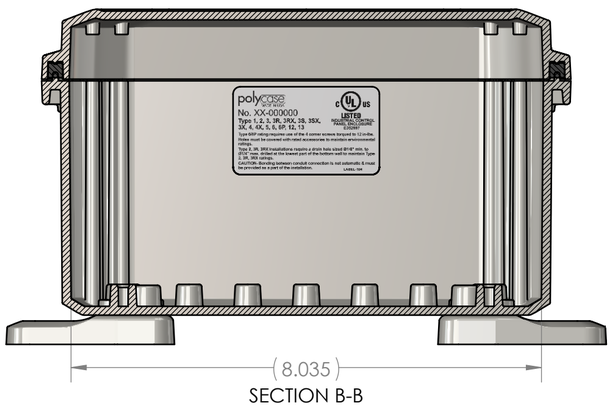

SECTION B-B

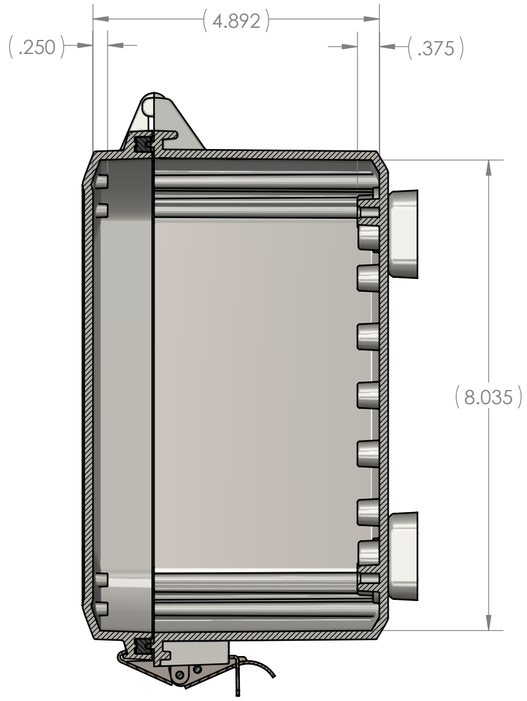

SECTION A-A

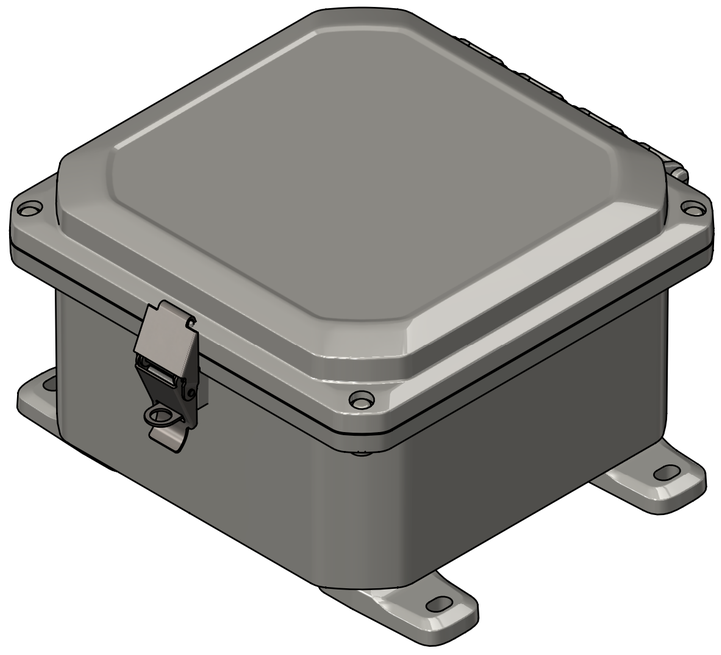

REV.	DESCRIPTION	ZONE	BY	APPR'D	DATE
-	RELEASED		D.M.F	D.M.F.	5/7/2020

REVISIONS

UNLESS OTHERWISE SPECIFIED:
DIMENSIONS ARE IN: INCHES[mm]
TOLERANCES: ANGULAR: ±2°
TWO PLACE DECIMAL: ±.010
THREE PLACE DECIMAL: ±.005
PRINTED GRAPHICS: ±.010

PROPRIETARY AND CONFIDENTIAL
THE INFORMATION CONTAINED IN THIS DRAWING IS THE SOLE PROPERTY OF POLYCASE. ANY REPRODUCTION IN PART OR AS A WHOLE WITHOUT THE WRITTEN PERMISSION OF POLYCASE IS PROHIBITED.

CAD FILE: ZH-080804

PART NO.
ZH-080804-01

MATERIAL

FLAME RATING
-

	NAME	DATE
DRAWN	D.M.F.	1/24/2019
CHECKED	-	12/31/2999

SIZE
C

SCALE: 1:2

HINGED ENCLOSURE

REV
-

SHEET 1 OF 7

polycase
1305 CHESTER IND. PARKWAY AVON, OHIO 44011-1083 U.S.A.
PH#: 1-800-248-1233, 440-934-0444 FAX#: 440-934-0088

BOM Table							
ITEM NO.	PART NUMBER	Rev.	Description	Material	FlameRating	Color	QTY.
1	ZH-01F-01	-	MOUNTING FOOT	PC	5VA	LIGHT GRAY	4
2	ZH-01L	-	LATCH ASSEMBLY	304SS			1
3	ZH-95P	-	HOLE PLUG	NYLON		LIGHT GRAY	4
4	SCREWS-046		#10-32 X .75 PAN HEAD, PHILLIPS, 316SS, MACHINE SCREW	316 SST			4
5	ZH-08084BI-01	-	HINGED BASE W/INSERTS				1
5.1	ZH-08084B-01	-	BASE, HINGED	PC	5VA	LIGHT GRAY	1
5.2	INSERTS-4	-	SELF-TAPPING INSERT: 10-32 UNF X .296 LG.	BRASS 360			12
5.3	LABEL-104	-	UL LABEL				1
6	ZH-08081CG-01	-	HINGED COVER W/GASKET				1
6.1	ZH-08081C-01	-	COVER, HINGED	PC	5VA	LIGHT GRAY	1
6.2	ZH-0808G	-	GASKET	NEOPRENE		BLACK	1

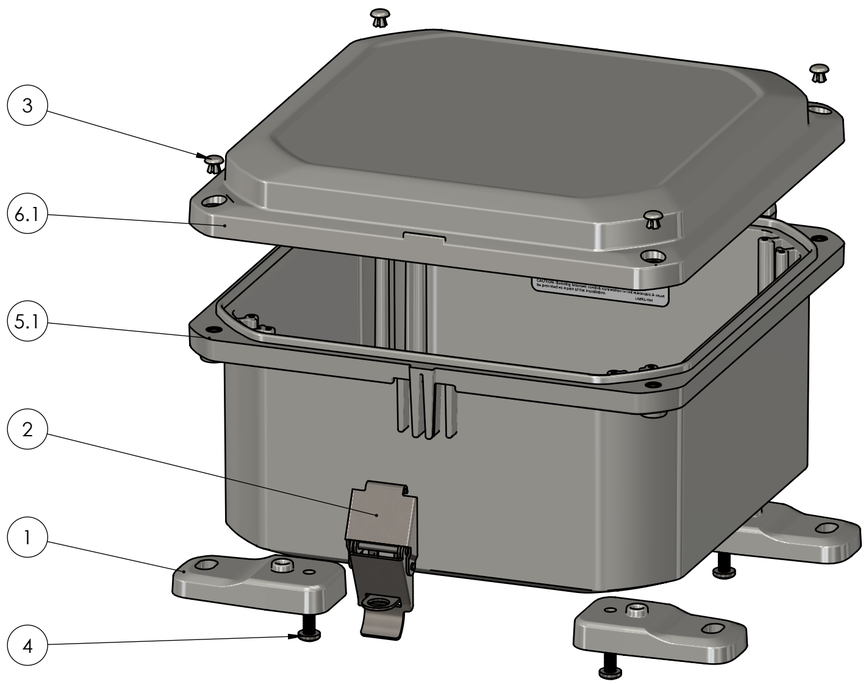

ZH-080804-01

BOM Table							
ITEM NO.	PART NUMBER	Rev.	Description	Material	FlameRating	Color	QTY.
11	ZH-01L	-	LATCH ASSEMBLY	304SS			1
12	ZH-01F-01	-	MOUNTING FOOT	PC	5VA	LIGHT GRAY	4
13	ZH-95P	-	HOLE PLUG	NYLON		LIGHT GRAY	4
14	SCREWS-046		#10-32 X .75 PAN HEAD, PHILLIPS, 316SS, MACHINE SCREW	316 SST			4
15	ZH-08084BI-01	-	HINGED BASE W/INSERTS				1
15.1	ZH-08084B-01	-	BASE, HINGED	PC	5VA	LIGHT GRAY	1
15.2	INSERTS-4	-	SELF-TAPPING INSERT: 10-32 UNF X .296 LG.	BRASS 360			12
15.3	LABEL-104	-	UL LABEL				1
16	ZH-08081CG-02	-	HINGED COVER W/GASKET				1
16.1	ZH-08081C-02	-	COVER, HINGED	PC	5VA	CLEAR	1
16.2	ZH-0808G	-	GASKET	NEOPRENE		BLACK	1

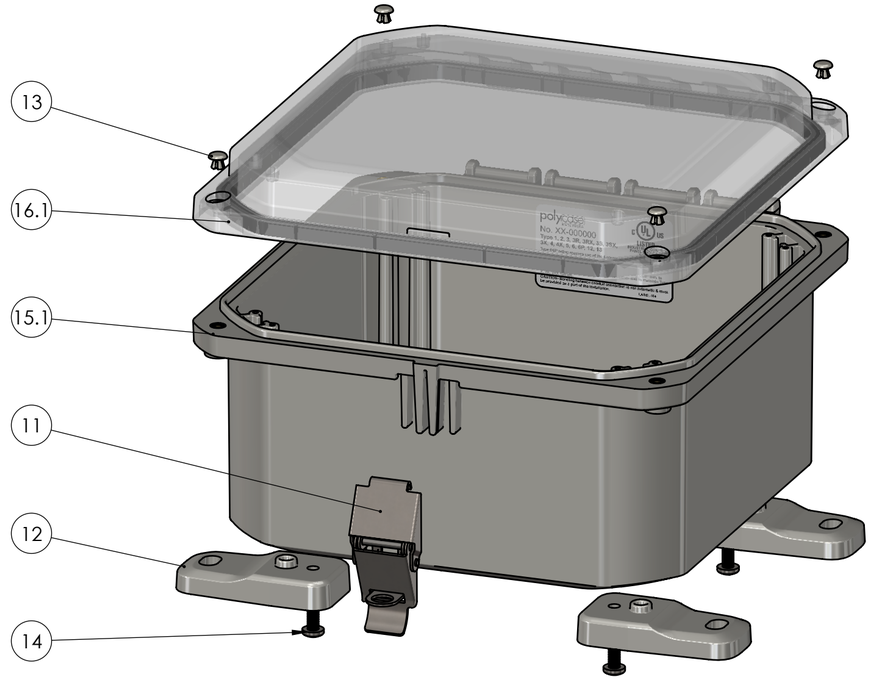

ZH-080804-05

UNLESS OTHERWISE SPECIFIED:
DIMENSIONS ARE IN: INCHES[mm]
TOLERANCES: ANGULAR: ±2°
TWO PLACE DECIMAL: ±.010
THREE PLACE DECIMAL: ±.005
PRINTED GRAPHICS: ±.010

PROPRIETARY AND CONFIDENTIAL
THE INFORMATION CONTAINED IN THIS DRAWING IS THE SOLE PROPERTY OF POLYCASE. ANY REPRODUCTION IN PART OR AS A WHOLE WITHOUT THE WRITTEN PERMISSION OF POLYCASE IS PROHIBITED.

CAD FILE: ZH-080804

PART NO.
ZH-080804-01

MATERIAL

FLAME RATING
-

SIZE
C

HINGED ENCLOSURE

REV
-

	NAME	DATE
DRAWN	D.M.F.	1/24/2019
CHECKED	-	12/31/2999

SCALE: 1:2

polycase
1305 CHESTER IND. PARKWAY AVON, OHIO 44011-1083 U.S.A.
PH#: 1-800-248-1233, 440-934-0444 FAX#: 440-934-0088

BOM Table							
ITEM NO.	PART NUMBER	Rev.	Description	Material	FlameRating	Color	QTY.
1	ZH-08084BI-01	-	HINGED BASE W/INSERTS				1
1.1	ZH-08084B-01	-	BASE, HINGED	PC	5VA	LIGHT GRAY	1
1.2	INSERTS-4	-	SELF-TAPPING INSERT: 10-32 UNF X .296 LG.	BRASS 360			12
1.3	LABEL-104	-	UL LABEL				1
2	ZH-08081CG-01	-	HINGED COVER W/GASKET				1
2.1	ZH-08081C-01	-	COVER, HINGED	PC	5VA	LIGHT GRAY	1
2.2	ZH-0808G	-	GASKET	NEOPRENE		BLACK	1
3	SCREWS-046		#10-32 X .75 PAN HEAD, PHILLIPS, 316SS, MACHINE SCREW	316 SST			8
4	ZH-01F-01	-	MOUNTING FOOT	PC	5VA	LIGHT GRAY	4

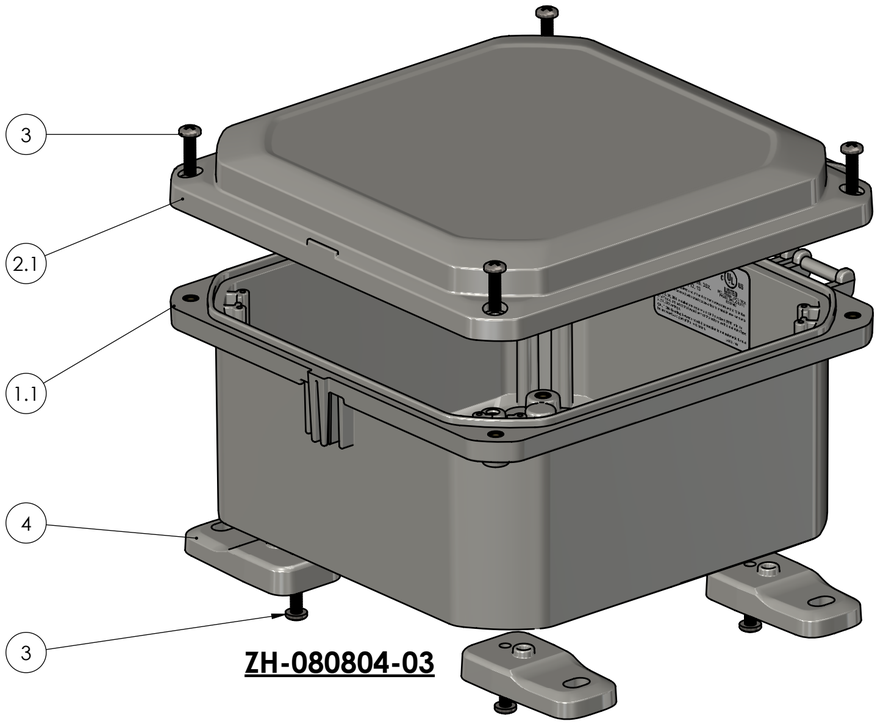

ZH-080804-03

BOM Table							
ITEM NO.	PART NUMBER	Rev.	Description	Material	FlameRating	Color	QTY.
11	ZH-08081CG-02	-	HINGED COVER W/GASKET				1
11.1	ZH-08081C-02	-	COVER, HINGED	PC	5VA	CLEAR	1
11.2	ZH-0808G	-	GASKET	NEOPRENE		BLACK	1
12	ZH-08084BI-01	-	HINGED BASE W/INSERTS				1
12.1	ZH-08084B-01	-	BASE, HINGED	PC	5VA	LIGHT GRAY	1
12.2	INSERTS-4	-	SELF-TAPPING INSERT: 10-32 UNF X .296 LG.	BRASS 360			12
12.3	LABEL-104	-	UL LABEL				1
13	SCREWS-046		#10-32 X .75 PAN HEAD, PHILLIPS, 316SS, MACHINE SCREW	316 SST			8
14	ZH-01F-01	-	MOUNTING FOOT	PC	5VA	LIGHT GRAY	4

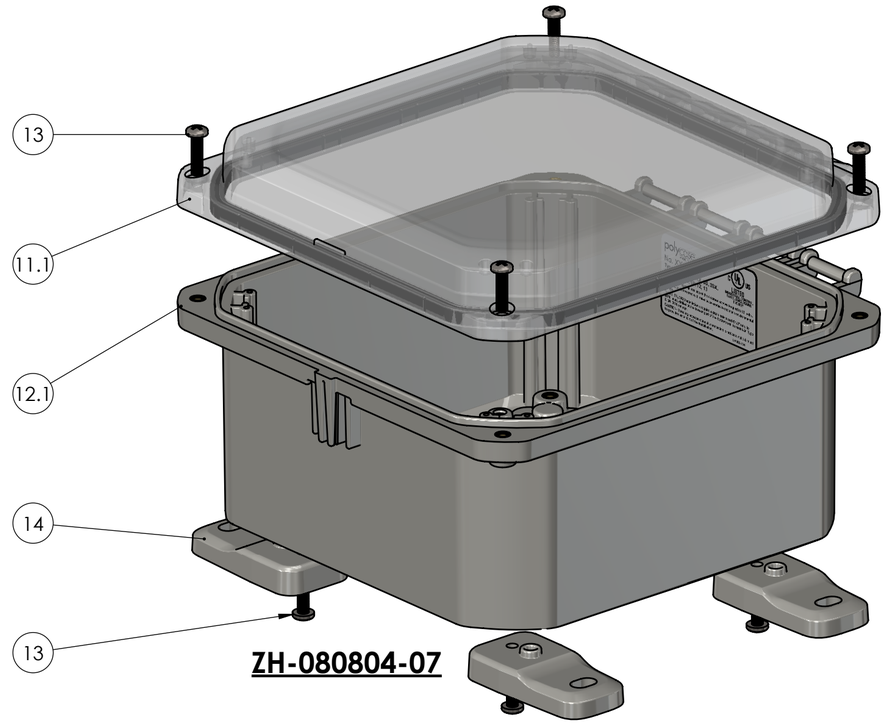

ZH-080804-07

UNLESS OTHERWISE SPECIFIED:
DIMENSIONS ARE IN: INCHES[mm]
TOLERANCES: ANGULAR: ±2°
TWO PLACE DECIMAL: ±.010
THREE PLACE DECIMAL: ±.005
PRINTED GRAPHICS: ±.010

PROPRIETARY AND CONFIDENTIAL
THE INFORMATION CONTAINED IN THIS DRAWING IS THE SOLE PROPERTY OF POLYCASE. ANY REPRODUCTION IN PART OR AS A WHOLE WITHOUT THE WRITTEN PERMISSION OF POLYCASE IS PROHIBITED.

CAD FILE: ZH-080804

PART NO.
ZH-080804-03

MATERIAL

FLAME RATING
-

SIZE
C

HINGED ENCLOSURE

REV
-

	NAME	DATE
DRAWN	D.M.F.	1/24/2019
CHECKED	-	12/31/2999

SCALE: 1:2

SHEET 3 OF 7

polycase
1305 CHESTER IND. PARKWAY AVON, OHIO 44011-1083 U.S.A.
PH#: 1-800-248-1233, 440-934-0444 FAX#: 440-934-0088

BOM Table							
ITEM NO.	PART NUMBER	Rev.	Description	Material	FlameRating	Color	QTY.
1	ZH-08084BI-01	-	HINGED BASE W/INSERTS				1
1.1	ZH-08084B-01	-	BASE, HINGED	PC	5VA	LIGHT GRAY	1
1.2	INSERTS-4	-	SELF-TAPPING INSERT: 10-32 UNF X .296 LG.	BRASS 360			12
1.3	LABEL-104	-	UL LABEL				1
2	ZH-08081CG-01	-	HINGED COVER W/GASKET				1
2.1	ZH-08081C-01	-	COVER, HINGED	PC	5VA	LIGHT GRAY	1
2.2	ZH-0808G	-	GASKET	NEOPRENE		BLACK	1
3	SCREWS-046		#10-32 X .75 PAN HEAD, PHILLIPS, 316SS, MACHINE SCREW	316 SST			4
4	ZH-01F-01	-	MOUNTING FOOT	PC	5VA	LIGHT GRAY	4
5	SCREWS-047	-	#10-32 X .75 TAMPER-RESIST TORX BUTTON-HEAD SCREW	304SS			4

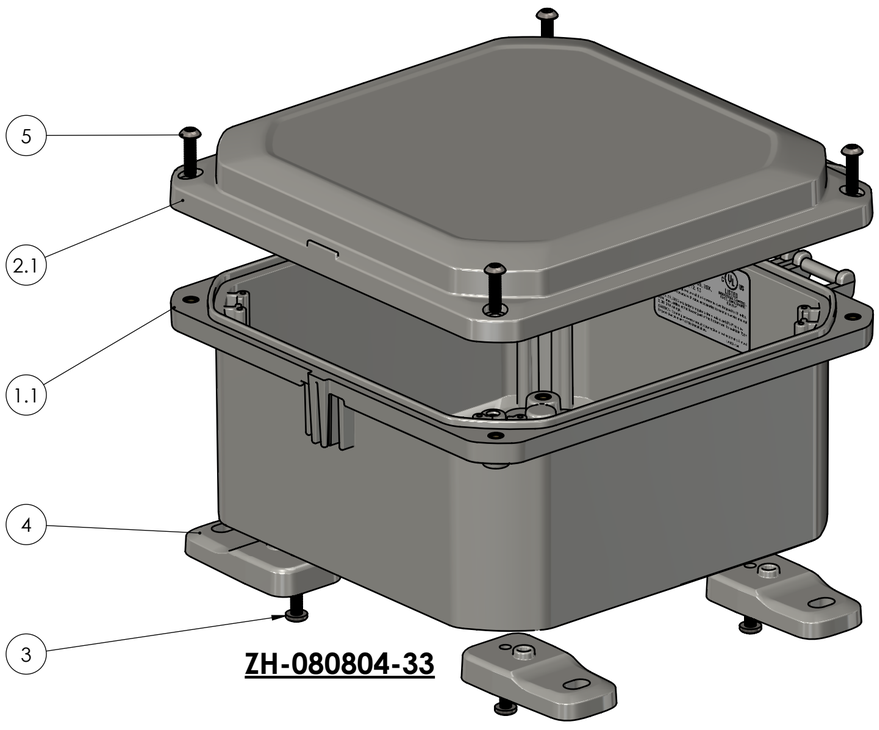

ZH-080804-33

BOM Table							
ITEM NO.	PART NUMBER	Rev.	Description	Material	FlameRating	Color	QTY.
11	ZH-08084BI-01	-	HINGED BASE W/INSERTS				1
11.1	ZH-08084B-01	-	BASE, HINGED	PC	5VA	LIGHT GRAY	1
11.2	INSERTS-4	-	SELF-TAPPING INSERT: 10-32 UNF X .296 LG.	BRASS 360			12
11.3	LABEL-104	-	UL LABEL				1
12	ZH-08081CG-02	-	HINGED COVER W/GASKET				1
12.1	ZH-08081C-02	-	COVER, HINGED	PC	5VA	CLEAR	1
12.2	ZH-0808G	-	GASKET	NEOPRENE		BLACK	1
13	SCREWS-046		#10-32 X .75 PAN HEAD, PHILLIPS, 316SS, MACHINE SCREW	316 SST			4
14	ZH-01F-01	-	MOUNTING FOOT	PC	5VA	LIGHT GRAY	4
15	SCREWS-047	-	#10-32 X .75 TAMPER-RESIST TORX BUTTON-HEAD SCREW	304SS			4

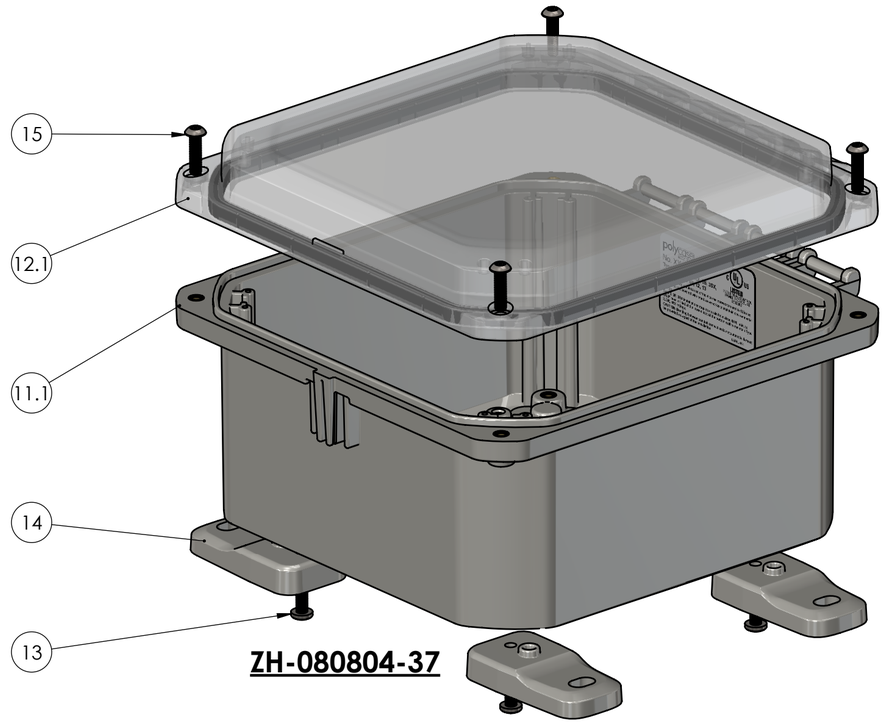

ZH-080804-37

UNLESS OTHERWISE SPECIFIED:
DIMENSIONS ARE IN: INCHES[mm]
TOLERANCES: ANGULAR: ±2°
TWO PLACE DECIMAL: ±.010
THREE PLACE DECIMAL: ±.005
PRINTED GRAPHICS: ±.010

PROPRIETARY AND CONFIDENTIAL
THE INFORMATION CONTAINED IN THIS DRAWING IS THE SOLE PROPERTY OF POLYCASE. ANY REPRODUCTION IN PART OR AS A WHOLE WITHOUT THE WRITTEN PERMISSION OF POLYCASE IS PROHIBITED.

CAD FILE: ZH-080804

PART NO.
ZH-080804-33

MATERIAL

FLAME RATING
-

SIZE
C

HINGED ENCLOSURE

REV
-

	NAME	DATE
DRAWN	D.M.F.	1/24/2019
CHECKED	-	12/31/2999

SCALE: 1:2

SHEET 4 OF 7

polycase
1305 CHESTER IND. PARKWAY AVON, OHIO 44011-1083 U.S.A.
PH#: 1-800-248-1233, 440-934-0444 FAX#: 440-934-0088

BOM Table							
ITEM NO.	PART NUMBER	Rev.	Description	Material	FlameRating	Color	QTY.
1	ZH-08084BI-01	-	HINGED BASE W/INSERTS				1
1.1	ZH-08084B-01	-	BASE, HINGED	PC	5VA	LIGHT GRAY	1
1.2	INSERTS-4	-	SELF-TAPPING INSERT: 10-32 UNF X .296 LG.	BRASS 360			12
1.3	LABEL-104	-	UL LABEL				1
2	ZH-08081CG-01	-	HINGED COVER W/GASKET				1
2.1	ZH-08081C-01	-	COVER, HINGED	PC	5VA	LIGHT GRAY	1
2.2	ZH-0808G	-	GASKET	NEOPRENE		BLACK	1
3	SCREWS-046		#10-32 X .75 PAN HEAD, PHILLIPS, 316SS, MACHINE SCREW	316 SST			4
4	ZH-95P	-	HOLE PLUG	NYLON		LIGHT GRAY	4
5	ZH-01L	-	LATCH ASSEMBLY	304SS			1
6	ZH-08F-01	-	MOUNTING FLANGE	PC	5VA	LIGHT GRAY	2

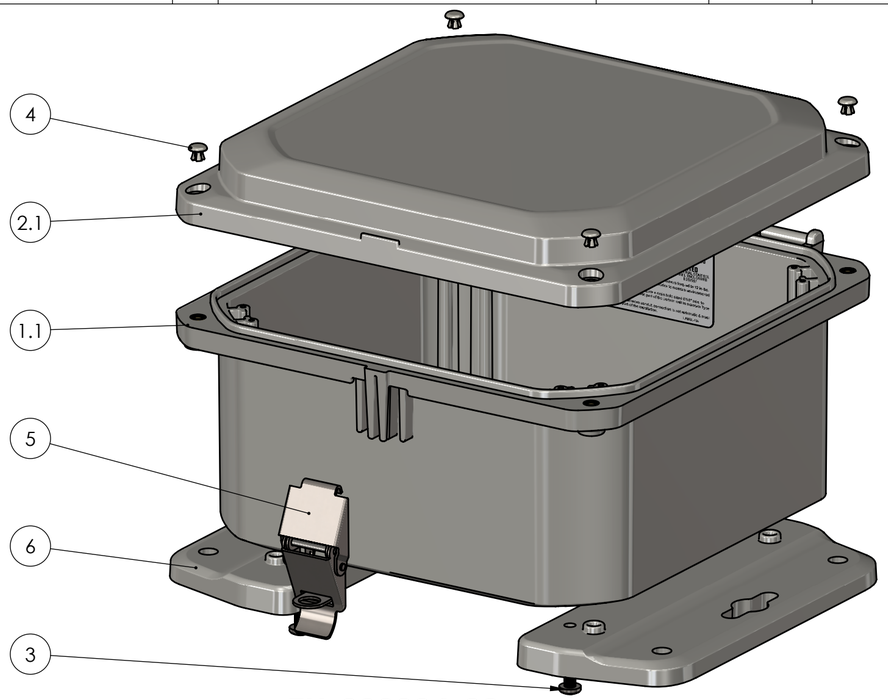

ZH-080804-02

BOM Table							
ITEM NO.	PART NUMBER	Rev.	Description	Material	FlameRating	Color	QTY.
11	ZH-01L	-	LATCH ASSEMBLY	304SS			1
12	ZH-08F-01	-	MOUNTING FLANGE	PC	5VA	LIGHT GRAY	2
13	ZH-95P	-	HOLE PLUG	NYLON		LIGHT GRAY	4
14	SCREWS-046		#10-32 X .75 PAN HEAD, PHILLIPS, 316SS, MACHINE SCREW	316 SST			4
15	ZH-08084BI-01	-	HINGED BASE W/INSERTS				1
15.1	ZH-08084B-01	-	BASE, HINGED	PC	5VA	LIGHT GRAY	1
15.2	INSERTS-4	-	SELF-TAPPING INSERT: 10-32 UNF X .296 LG.	BRASS 360			12
15.3	LABEL-104	-	UL LABEL				1
16	ZH-08081CG-02	-	HINGED COVER W/GASKET				1
16.1	ZH-08081C-02	-	COVER, HINGED	PC	5VA	CLEAR	1
16.2	ZH-0808G	-	GASKET	NEOPRENE		BLACK	1

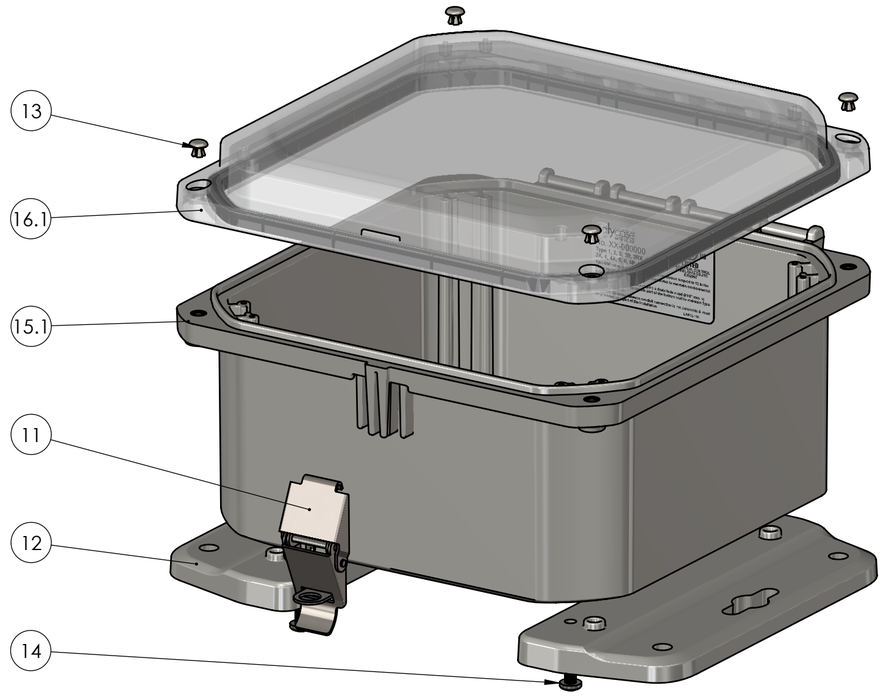

ZH-080804-06

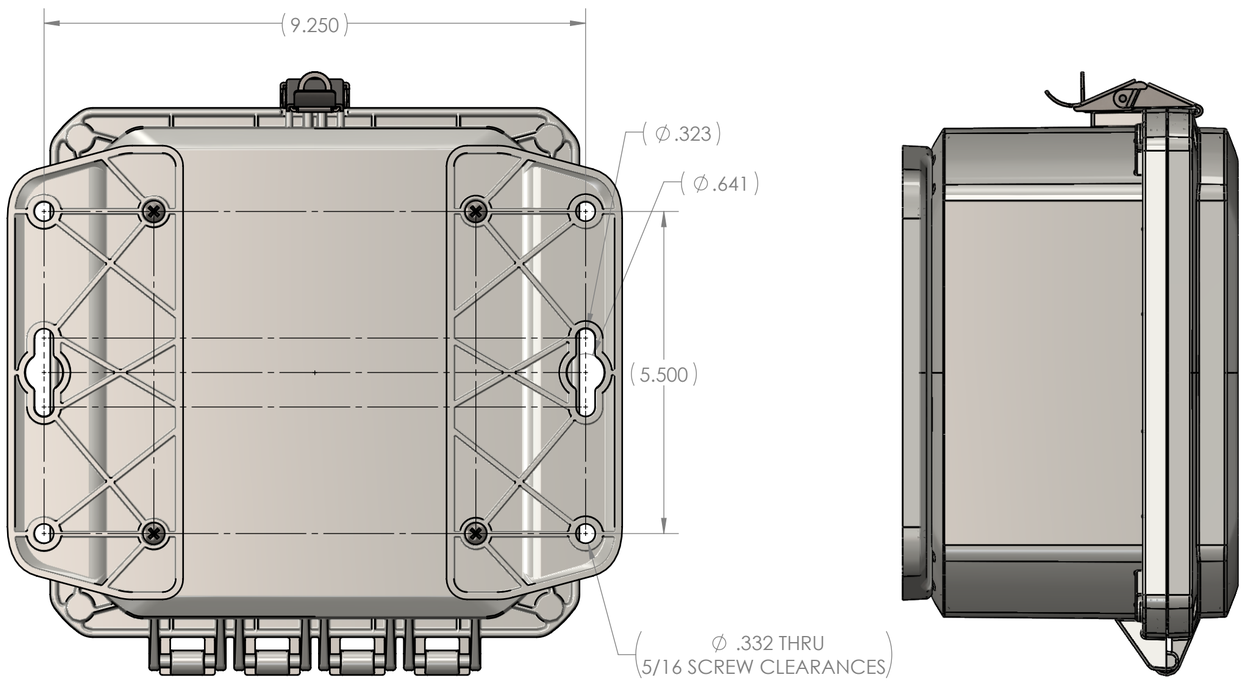

UNLESS OTHERWISE SPECIFIED:
DIMENSIONS ARE IN: INCHES[mm]
TOLERANCES: ANGULAR: ±2°
TWO PLACE DECIMAL: ±.010
THREE PLACE DECIMAL: ±.005
PRINTED GRAPHICS: ± .010

PROPRIETARY AND CONFIDENTIAL
THE INFORMATION CONTAINED IN THIS DRAWING IS THE SOLE PROPERTY OF POLYCASE. ANY REPRODUCTION IN PART OR AS A WHOLE WITHOUT THE WRITTEN PERMISSION OF POLYCASE IS PROHIBITED.

CAD FILE: ZH-080804

PART NO.
ZH-080804-02

MATERIAL

FLAME RATING
-

	NAME	DATE
DRAWN	D.M.F.	1/24/2019
CHECKED	-	12/31/2999

SIZE
C

HINGED ENCLOSURE

REV
-

SCALE: 1:2

SHEET 5 OF 7

polycase
1305 CHESTER IND. PARKWAY AVON, OHIO 44011-1083 U.S.A.
PH#: 1-800-248-1233, 440-934-0444 FAX#: 440-934-0088

BOM Table							
ITEM NO.	PART NUMBER	Rev.	Description	Material	FlameRating	Color	QTY.
1	ZH-08084BI-01	-	HINGED BASE W/INSERTS				1
1.1	ZH-08084B-01	-	BASE, HINGED	PC	5VA	LIGHT GRAY	1
1.2	INSERTS-4	-	SELF-TAPPING INSERT: 10-32 UNF X .296 LG.	BRASS 360			12
1.3	LABEL-104	-	UL LABEL				1
2	ZH-08081CG-01	-	HINGED COVER W/GASKET				1
2.1	ZH-08081C-01	-	COVER, HINGED	PC	5VA	LIGHT GRAY	1
2.2	ZH-0808G	-	GASKET	NEOPRENE		BLACK	1
3	SCREWS-046		#10-32 X .75 PAN HEAD, PHILLIPS, 316SS, MACHINE SCREW	316 SST			8
4	ZH-08F-01	-	MOUNTING FLANGE	PC	5VA	LIGHT GRAY	2

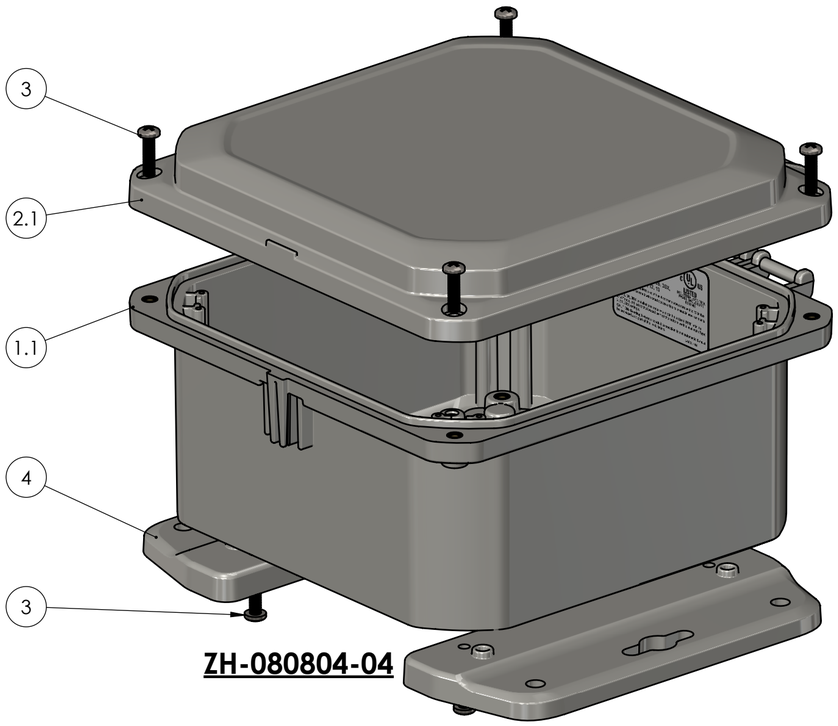

ZH-080804-04

BOM Table							
ITEM NO.	PART NUMBER	Rev.	Description	Material	FlameRating	Color	QTY.
11	ZH-08084BI-01	-	HINGED BASE W/INSERTS				1
11.1	ZH-08084B-01	-	BASE, HINGED	PC	5VA	LIGHT GRAY	1
11.2	INSERTS-4	-	SELF-TAPPING INSERT: 10-32 UNF X .296 LG.	BRASS 360			12
11.3	LABEL-104	-	UL LABEL				1
12	ZH-08081CG-02	-	HINGED COVER W/GASKET				1
12.1	ZH-08081C-02	-	COVER, HINGED	PC	5VA	CLEAR	1
12.2	ZH-0808G	-	GASKET	NEOPRENE		BLACK	1
13	SCREWS-046		#10-32 X .75 PAN HEAD, PHILLIPS, 316SS, MACHINE SCREW	316 SST			8
14	ZH-08F-01	-	MOUNTING FLANGE	PC	5VA	LIGHT GRAY	2

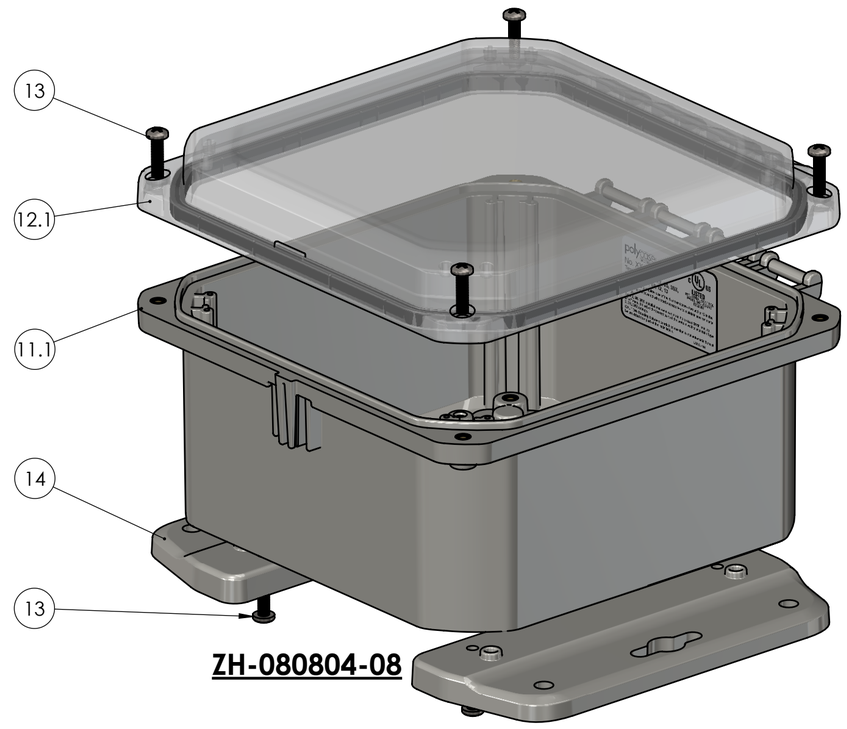

ZH-080804-08

UNLESS OTHERWISE SPECIFIED:
DIMENSIONS ARE IN: INCHES[mm]
TOLERANCES: ANGULAR: ±2°
TWO PLACE DECIMAL: ±.010
THREE PLACE DECIMAL: ±.005
PRINTED GRAPHICS: ±.010

PROPRIETARY AND CONFIDENTIAL
THE INFORMATION CONTAINED IN THIS DRAWING IS THE SOLE PROPERTY OF POLYCASE. ANY REPRODUCTION IN PART OR AS A WHOLE WITHOUT THE WRITTEN PERMISSION OF POLYCASE IS PROHIBITED.

CAD FILE: ZH-080804

PART NO.
ZH-080804-04

MATERIAL

FLAME RATING
-

	NAME	DATE
DRAWN	D.M.F.	1/24/2019
CHECKED	-	12/31/2999

SIZE
C

HINGED ENCLOSURE

REV
-

SCALE: 1:2

SHEET 6 OF 7

polycase
1305 CHESTER IND. PARKWAY AVON, OHIO 44011-1083 U.S.A.
PH#: 1-800-248-1233, 440-934-5444 FAX#: 440-934-0088

BOM Table							
ITEM NO.	PART NUMBER	Rev.	Description	Material	FlameRating	Color	QTY.
1	ZH-08084BI-01	-	HINGED BASE W/INSERTS				1
1.1	ZH-08084B-01	-	BASE, HINGED	PC	5VA	LIGHT GRAY	1
1.2	INSERTS-4	-	SELF-TAPPING INSERT: 10-32 UNF X .296 LG.	BRASS 360			12
1.3	LABEL-104	-	UL LABEL				1
2	ZH-08081CG-01	-	HINGED COVER W/GASKET				1
2.1	ZH-08081C-01	-	COVER, HINGED	PC	5VA	LIGHT GRAY	1
2.2	ZH-0808G	-	GASKET	NEOPRENE		BLACK	1
3	SCREWS-046		#10-32 X .75 PAN HEAD, PHILLIPS, 316SS, MACHINE SCREW	316 SST			4
4	ZH-08F-01	-	MOUNTING FLANGE	PC	5VA	LIGHT GRAY	2
5	SCREWS-047	-	#10-32 X .75 TAMPER-RESIST TORX BUTTON-HEAD SCREW	304SS			4

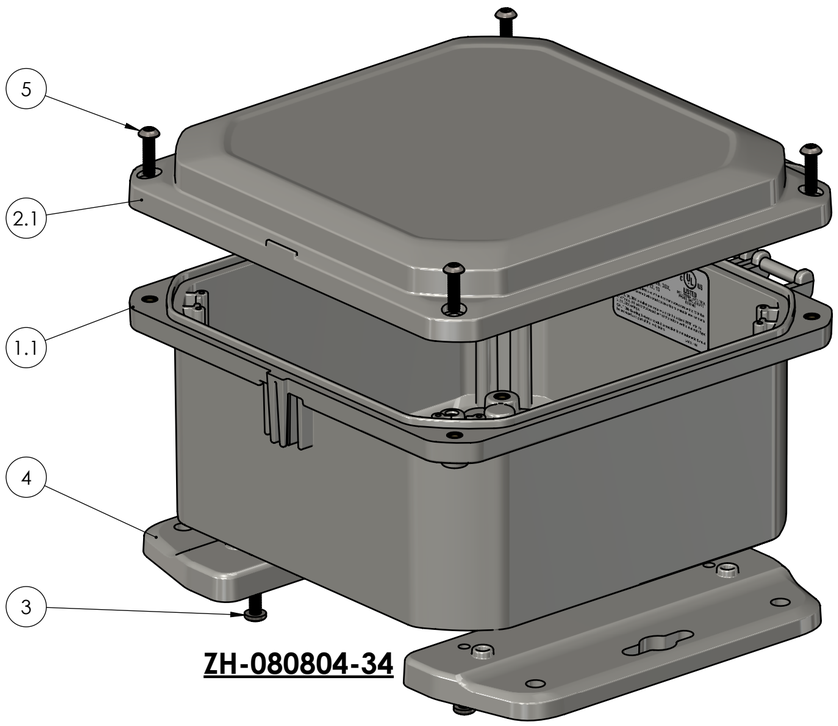

ZH-080804-34

BOM Table							
ITEM NO.	PART NUMBER	Rev.	Description	Material	FlameRating	Color	QTY.
11	ZH-08084BI-01	-	HINGED BASE W/INSERTS				1
11.1	ZH-08084B-01	-	BASE, HINGED	PC	5VA	LIGHT GRAY	1
11.2	INSERTS-4	-	SELF-TAPPING INSERT: 10-32 UNF X .296 LG.	BRASS 360			12
11.3	LABEL-104	-	UL LABEL				1
12	ZH-08081CG-02	-	HINGED COVER W/GASKET				1
12.1	ZH-08081C-02	-	COVER, HINGED	PC	5VA	CLEAR	1
12.2	ZH-0808G	-	GASKET	NEOPRENE		BLACK	1
13	SCREWS-046		#10-32 X .75 PAN HEAD, PHILLIPS, 316SS, MACHINE SCREW	316 SST			4
14	ZH-08F-01	-	MOUNTING FLANGE	PC	5VA	LIGHT GRAY	2
15	SCREWS-047	-	#10-32 X .75 TAMPER-RESIST TORX BUTTON-HEAD SCREW	304SS			4

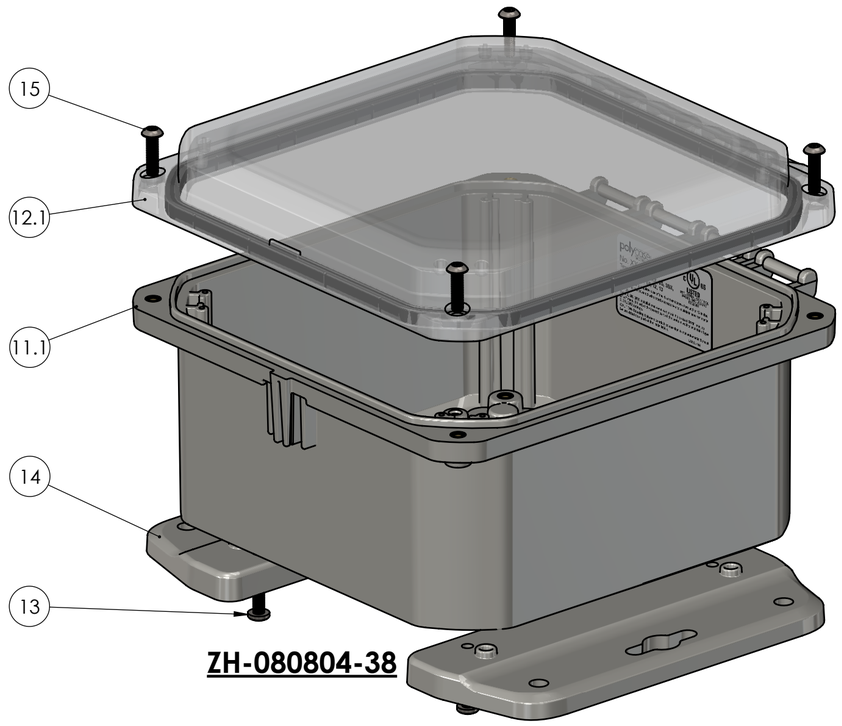

ZH-080804-38

UNLESS OTHERWISE SPECIFIED:
DIMENSIONS ARE IN: INCHES[mm]
TOLERANCES: ANGULAR: ±2°
TWO PLACE DECIMAL: ±.010
THREE PLACE DECIMAL: ±.005
PRINTED GRAPHICS: ±.010

PROPRIETARY AND CONFIDENTIAL
THE INFORMATION CONTAINED IN THIS DRAWING IS THE SOLE PROPERTY OF POLYCASE. ANY REPRODUCTION IN PART OR AS A WHOLE WITHOUT THE WRITTEN PERMISSION OF POLYCASE IS PROHIBITED.

CAD FILE: ZH-080804

PART NO.
ZH-080804-34

MATERIAL

FLAME RATING
-

	NAME	DATE
DRAWN	D.M.F.	1/24/2019
CHECKED	-	12/31/2999

SIZE
C

HINGED ENCLOSURE

REV
-

SCALE: 1:2

SHEET 7 OF 7

polycase
1305 CHESTER IND. PARKWAY AVON, OHIO 44011-1083 U.S.A.
PH#: 1-800-248-1233, 440-934-5444 FAX#: 440-934-0088

TOLERANCE CHART																
DIMENSION RANGE	0	.039	.118	.236	.394	.591	.866	1.181	1.575	2.087	2.756	3.543	4.724	6.299	7.874	9.843
	.039	.118	.236	.394	.591	.866	1.181	1.575	2.087	2.756	3.543	4.724	6.299	7.874	9.843	12.402
TOOL DEPENDENT	±.007	±.007	±.008	±.008	±.009	±.010	±.011	±.012	±.013	±.015	±.017	±.020	±.024	±.028	±.035	.043
NON-TOOL DEPENDENT	±.003	±.004	±.004	±.004	±.005	±.006	±.007	±.008	±.009	±.011	±.013	±.016	±.020	±.024	±.031	.039

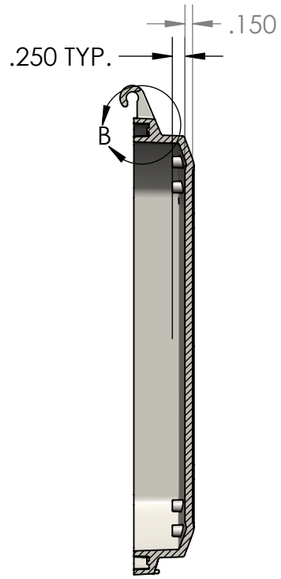

SECTION A-A

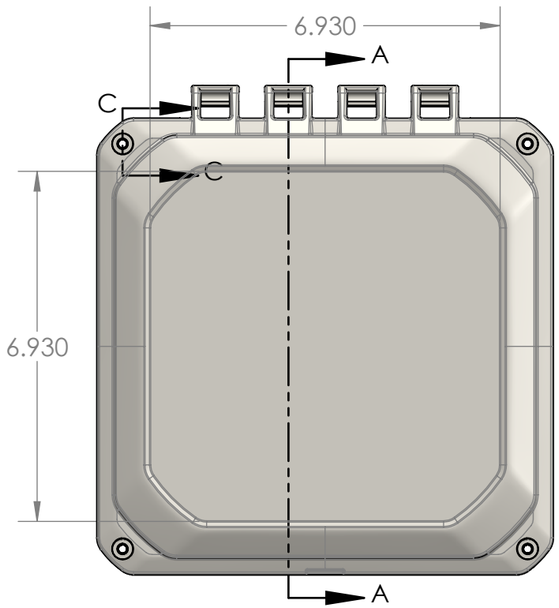

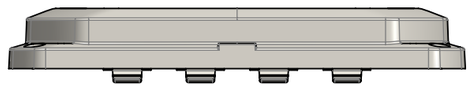

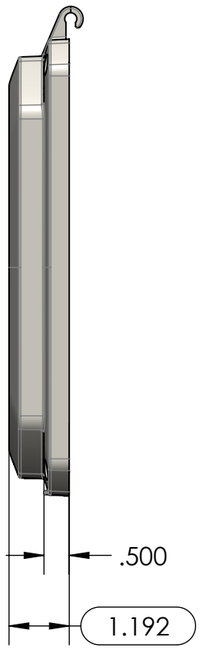

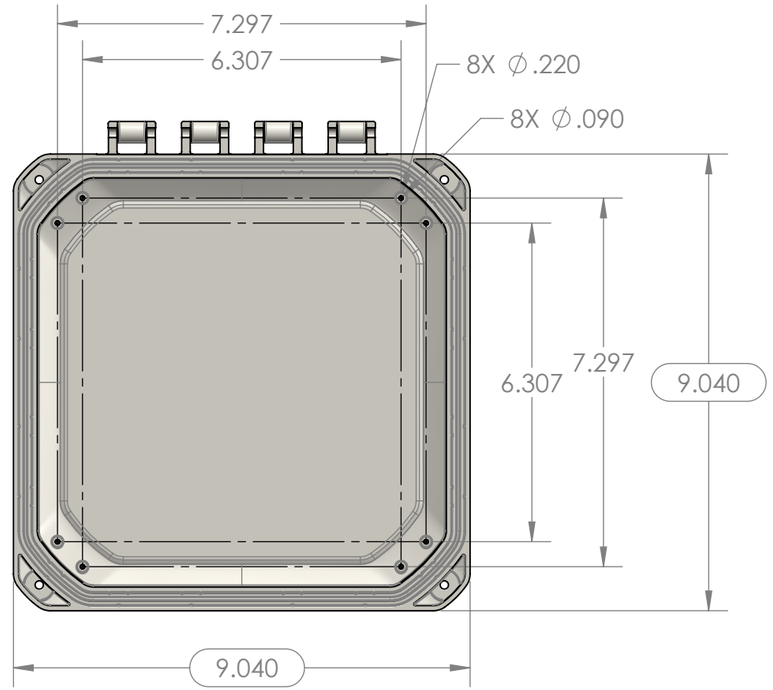

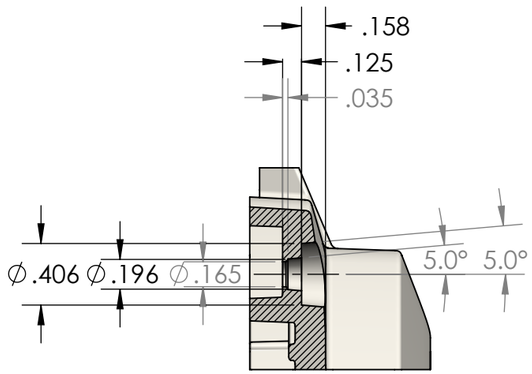

SECTION C-C
SCALE 1 : 1

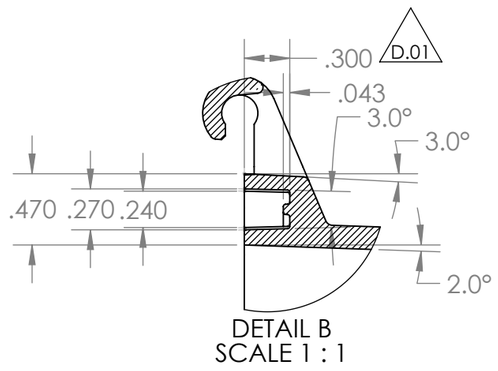

DETAIL B
SCALE 1 : 1

PART NUMBER: ZH-08081C-01
MATERIAL: PC
MATERIAL SPEC: /PC/XXX/GY
COLOR: LIGHT GRAY
FLAME RATING: 5VA

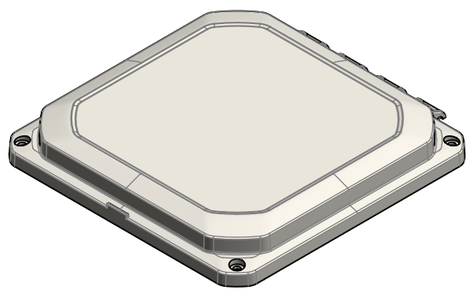

PART NUMBER: ZH-08081C-02
MATERIAL: PC
MATERIAL SPEC: /PC/XXX/CL
COLOR: CLEAR
FLAME RATING: 5VA

NOTES:
1. REFER TO SOLID MODEL FOR COMPLETE PART DEFINITION.
2. (INSPECTION DIMENSION)
3. EJECTOR PINS TO BE FLUSH ±.010
4. FLASH .005 MAX
5. GATE TO BE REMOVED FLUSH ±.015

REV.	DESCRIPTION	ZONE	BY	APPR'D	DATE
REVISIONS					
-	PRODUCTION RELEASE		D.M.F.	D.M.F.	4/27/2020
D.01	.043 WAS .063	B5	D.M.F.		10/11/2019
D	RELEASED FOR QUOTE		D.M.F.		7/9/2019

UNLESS OTHERWISE SPECIFIED:
DIMENSIONS ARE IN: INCHES[mm]
TOLERANCES: ANGULAR: ±2°
TWO PLACE DECIMAL: ±.010
THREE PLACE DECIMAL: ±.005
PRINTED GRAPHICS: ±.010

PROPRIETARY AND CONFIDENTIAL
THE INFORMATION CONTAINED IN THIS DRAWING IS THE SOLE PROPERTY OF POLYCASE. ANY REPRODUCTION IN PART OR AS A WHOLE WITHOUT THE WRITTEN PERMISSION OF POLYCASE IS PROHIBITED.

CAD FILE: ZH-08081C

PART NO.
ZH-08081C-01

MATERIAL
PC

FLAME RATING
5VA

	NAME	DATE
DRAWN	D.M.F.	1/24/2019
CHECKED	-	1/14/2019

SIZE
B

COVER, HINGED

REV
-

SCALE: 1:3

SHEET 1 OF 1

polycase
1305 CHESTER IND. PARKWAY AVON, OHIO 44011-1083 U.S.A.
PH#: 1-800-248-1233, 440-934-0444 FAX#: 440-934-0088

BOM Table								
ITEM NO.	PART NUMBER	Rev.	Description	Material	FlameRating	Color	ZH-08081CG-01/QTY.	ZH-08081CG-02/QTY.
1	ZH-08081C-01	-	COVER, HINGED	PC	5VA	LIGHT GRAY	1	-
2	ZH-0808G	-	GASKET	NEOPRENE		BLACK	1	1
3	ZH-08081C-02	-	COVER, HINGED	PC	5VA	CLEAR	-	1

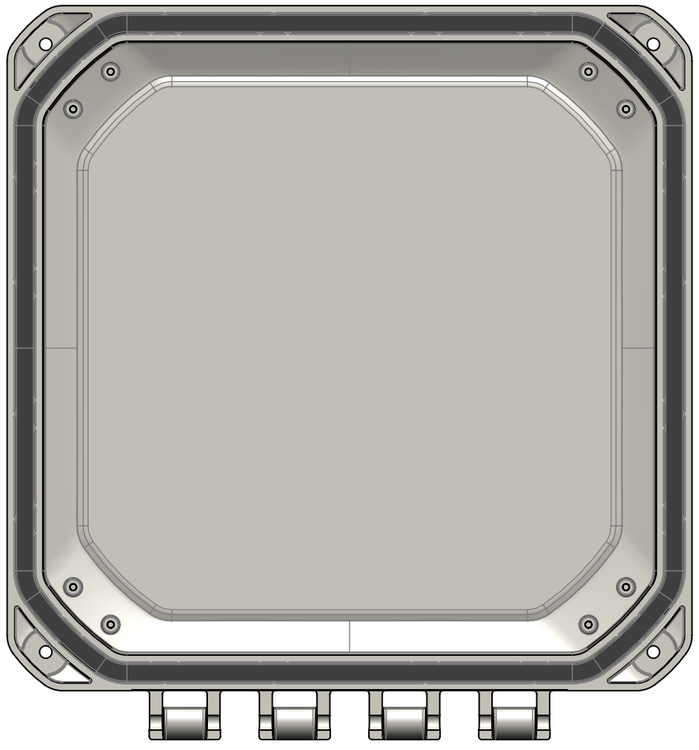

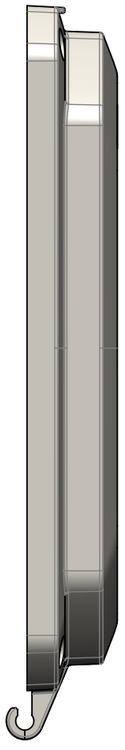

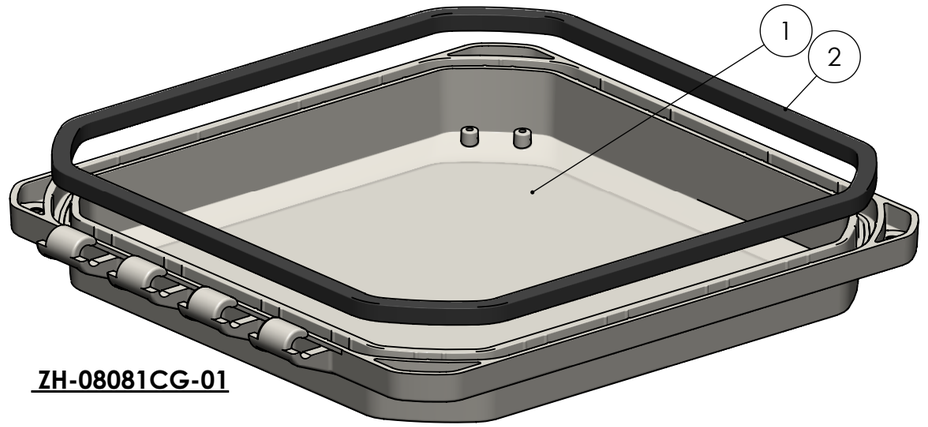

ZH-08081CG-01

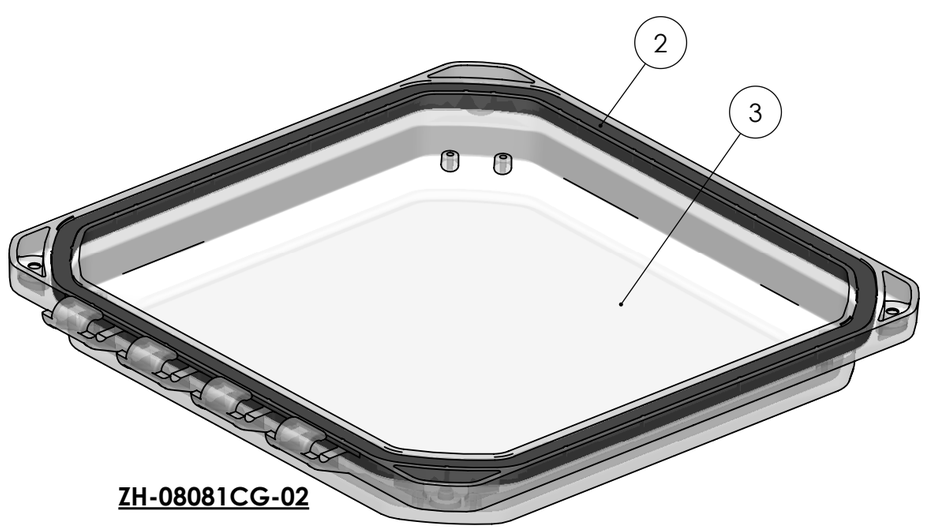

ZH-08081CG-02

REV.	DESCRIPTION	ZONE	BY	APPR'D	DATE
-	PRODUCTION RELEASE		D.M.F.	D.MF.	4/27/2020

REVISIONS

UNLESS OTHERWISE SPECIFIED:
DIMENSIONS ARE IN: INCHES[mm]
TOLERANCES: ANGULAR: ±2°
TWO PLACE DECIMAL: ±.010
THREE PLACE DECIMAL: ±.005
PRINTED GRAPHICS: ±.010

PROPRIETARY AND CONFIDENTIAL
THE INFORMATION CONTAINED IN THIS DRAWING IS THE SOLE PROPERTY OF POLYCASE. ANY REPRODUCTION IN PART OR AS A WHOLE WITHOUT THE WRITTEN PERMISSION OF POLYCASE IS PROHIBITED.

CAD FILE: ZH-08081CG

PART NO.
ZH-08081CG-01

MATERIAL

FLAME RATING

	NAME	DATE
DRAWN	D.M.F.	1/24/2019
CHECKED	-	12/31/2999

SIZE **B**

SCALE: 1:2

polycase
1305 CHESTER IND. PARKWAY AVON, OHIO 44011-1083 U.S.A.
PH#: 1-800-248-1233, 440-934-0444 FAX#: 440-934-0088

HINGED COVER W/GASKET

REV -

SHEET 1 OF 1

TOLERANCE CHART																				
DIMENSION RANGE	0	.039	.118	.236	.394	.591	.866	1.181	1.575	2.087	2.756	3.543	4.724	6.299	7.874	9.843	12.402	15.748	19.685	24.803	31.496
	.039	.118	.236	.394	.591	.866	1.181	1.575	2.087	2.756	3.543	4.724	6.299	7.874	9.843	12.402	15.748	19.685	24.803	31.496	39.37
TOOL DEPENDENT	±.007	±.007	±.008	±.008	±.009	±.010	±.011	±.012	±.013	±.015	±.017	±.020	±.024	±.028	±.035	.043	.051	.063	.079	.098	.118
NON-TOOL DEPENDENT	±.003	±.004	±.004	±.004	±.005	±.006	±.007	±.008	±.009	±.011	±.013	±.016	±.020	±.024	±.031	.039	.047	.059	.075	.094	.114

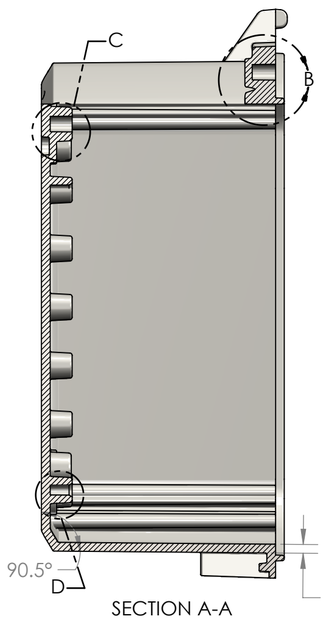

SECTION A-A

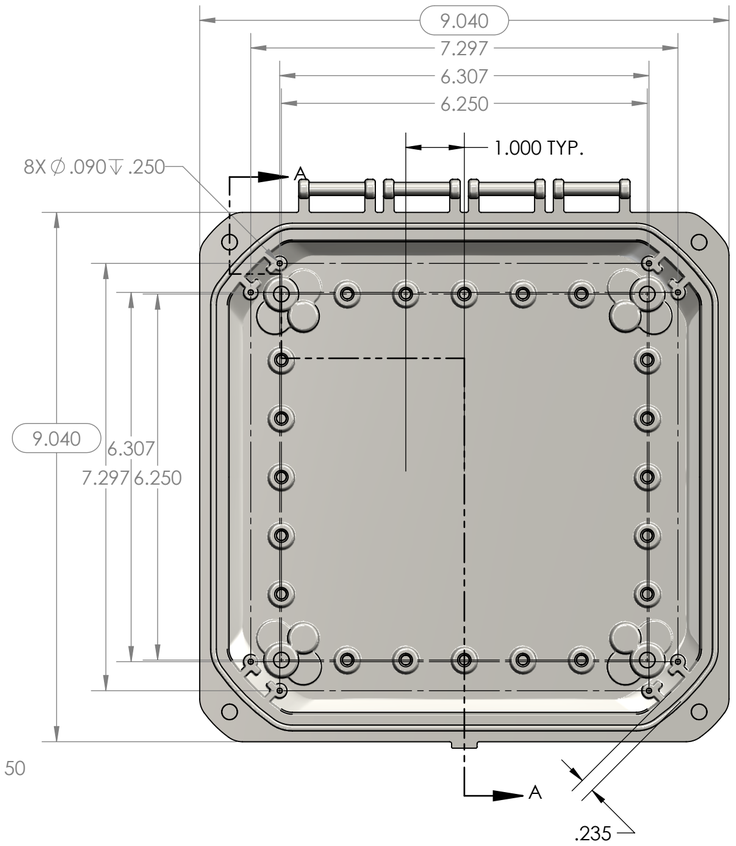

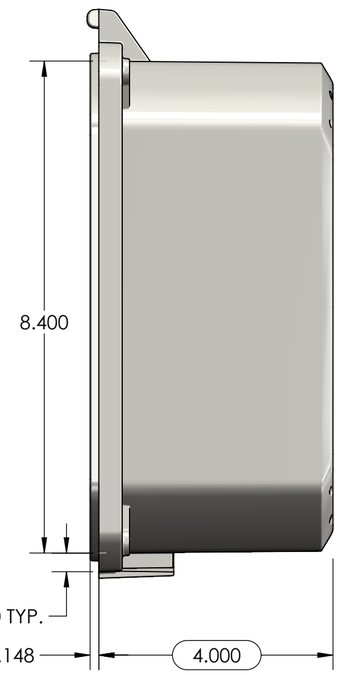

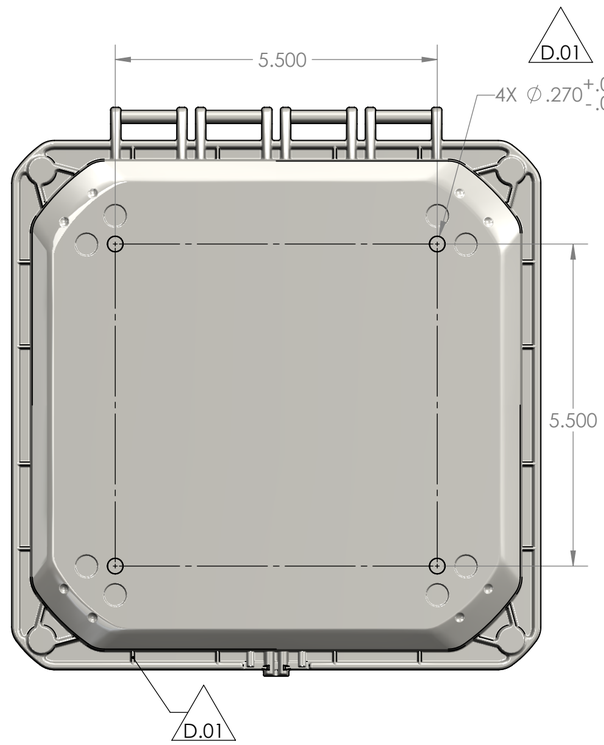

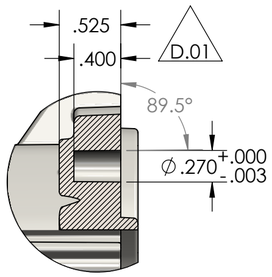

DETAIL B
SCALE 1 : 1

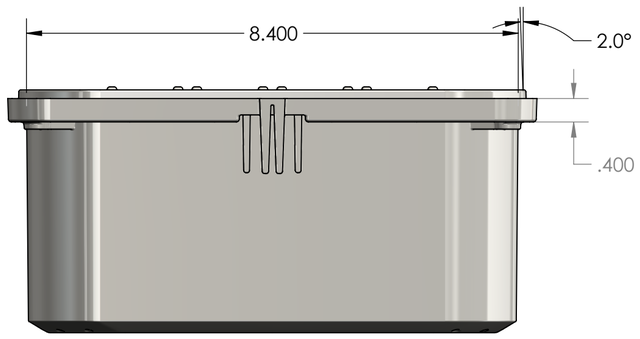

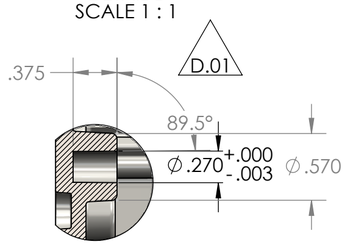

DETAIL C
SCALE 1 : 1

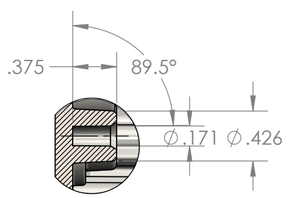

DETAIL D
SCALE 1 : 1

PART NUMBER: ZH-08084B-01
MATERIAL: PC
MATERIAL SPEC: /PC/XXX/GY
COLOR: LIGHT GRAY
FLAME RATING: 5VA

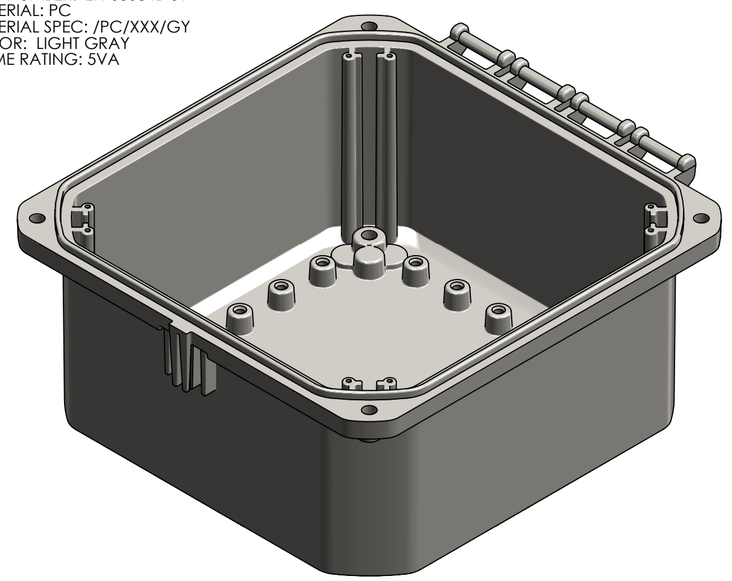

NOTES:
1. REFER TO SOLID MODEL FOR COMPLETE PART DEFINITION.
2. (INSPECTION DIMENSION)
3. EJECTOR PINS TO BE FLUSH ±.010
4. FLASH .005 MAX
5. GATE TO BE REMOVED FLUSH ±.015

REVISIONS					
REV.	DESCRIPTION	ZONE	BY	APPR'D	DATE
-	PRODUCTION RELEASE		D.M.F.	D.M.F.	4/24/2020
D.01	MADE RIBS SYMMETRICAL, BRASS INSERT HOLES: ∅.270 WAS ∅.264, .148 WAS .128	C8, D2, D4, D8, F1	D.M.F.		10/11/2019
D	RELEASED FOR QUOTE		D.M.F.		7/9/2019

UNLESS OTHERWISE SPECIFIED:
DIMENSIONS ARE IN: INCHES[mm]
TOLERANCES: ANGULAR: ±.°
TWO PLACE DECIMAL: ±.
THREE PLACE DECIMAL: ±.
PRINTED GRAPHICS: ±.010
PROPRIETARY AND CONFIDENTIAL
THE INFORMATION CONTAINED IN THIS DRAWING IS THE SOLE PROPERTY OF POLYCASE. ANY REPRODUCTION IN PART OR AS A WHOLE WITHOUT THE WRITTEN PERMISSION OF POLYCASE IS PROHIBITED.
CAD FILE: ZH-08084B

PART NO. ZH-08084B-01
MATERIAL PC
FLAME RATING 5VA
SIZE C
BASE, HINGED
REV -

	NAME	DATE
DRAWN	D.M.F.	1/24/2019
CHECKED	-	1/14/2019

SCALE: 1:2
SHEET 1 OF 1

polycase
1305 CHESTER IND. PARKWAY AVON, OHIO 44011-1083 U.S.A.
PH# 1-800-248-1233, 440-934-2444 FAX#: 440-934-0088

BOM Table							
ITEM NO.	PART NUMBER	Rev.	Description	Material	FlameRating	Color	ZH-08084BI-01/QTY.
1	ZH-08084B-01	-	BASE, HINGED	PC	5VA	LIGHT GRAY	1
2	INSERTS-4	-	SELF-TAPPING INSERT: 10-32 UNF X .296 LG.	BRASS 360			12
3	LABEL-104	-	UL LABEL				1

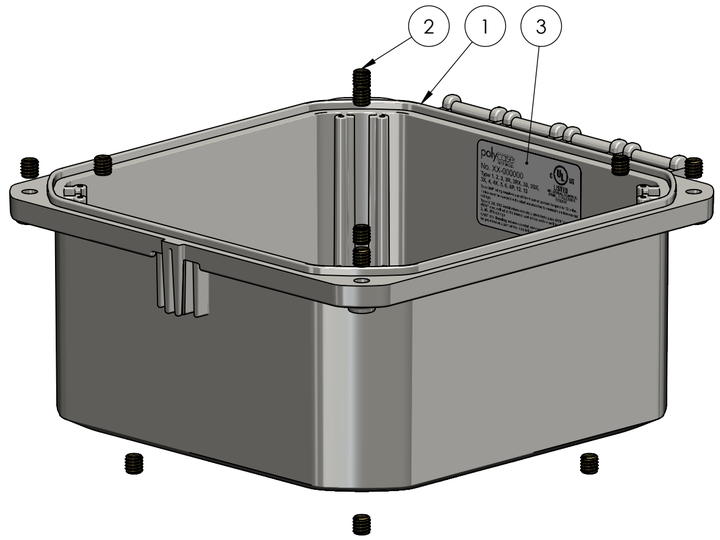

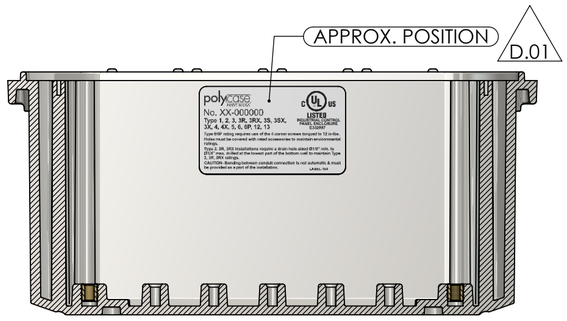

SECTION B-B

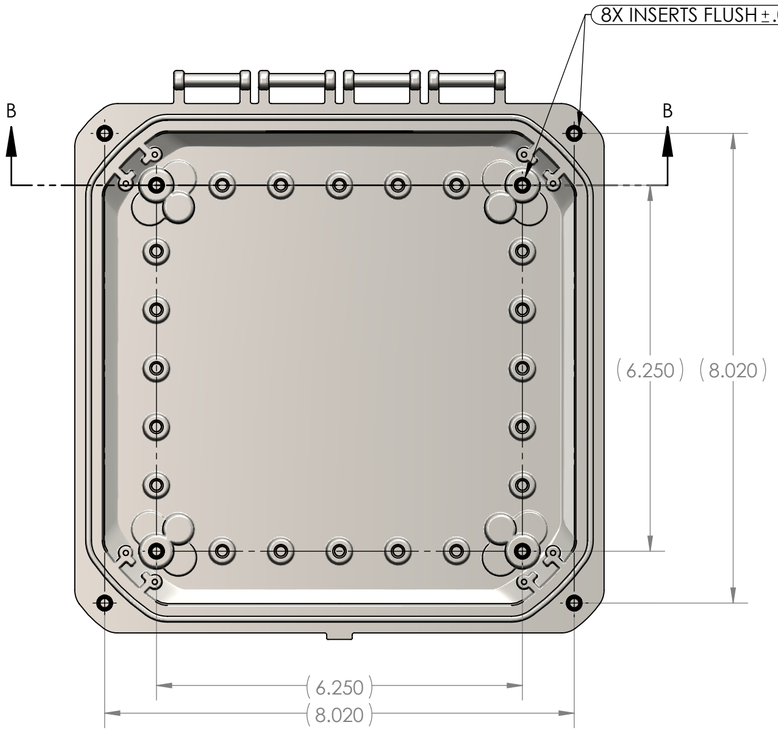

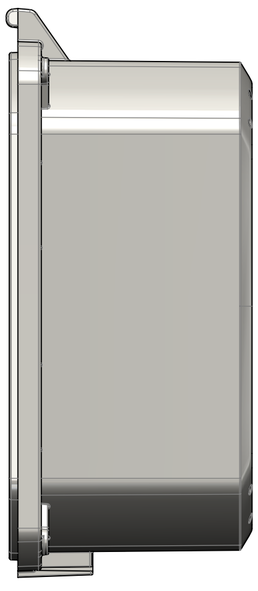

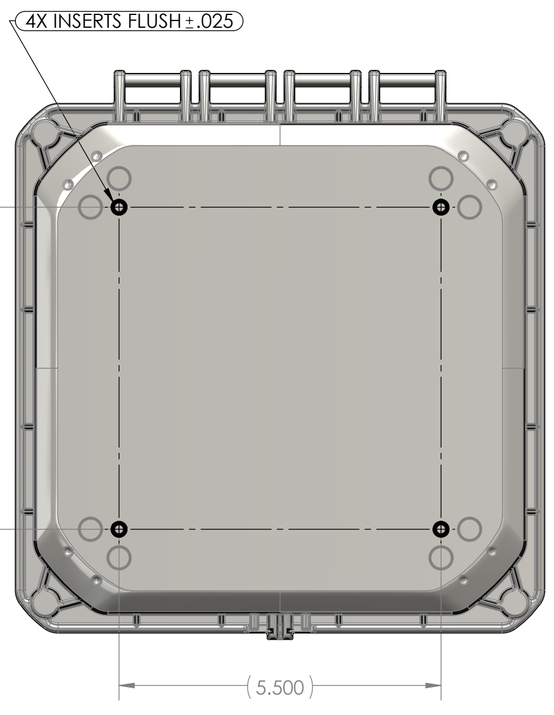

REVISIONS					
REV.	DESCRIPTION	ZONE	BY	APPR'D	DATE
D.01	ADDED LABEL	E6	D.M.F.		12/4/2019
-	PRODUCTION RELEASE		D.M.F.	D.M.F.	4/24/2020

UNLESS OTHERWISE SPECIFIED:
DIMENSIONS ARE IN: INCHES[mm]
TOLERANCES: ANGULAR: ±2°
TWO PLACE DECIMAL: ±.010
THREE PLACE DECIMAL: ±.005
PRINTED GRAPHICS: ±.010

PROPRIETARY AND CONFIDENTIAL
THE INFORMATION CONTAINED IN THIS DRAWING IS THE SOLE PROPERTY OF POLYCASE. ANY REPRODUCTION IN PART OR AS A WHOLE WITHOUT THE WRITTEN PERMISSION OF POLYCASE IS PROHIBITED.

CAD FILE: ZH-08084BI

PART NO.
ZH-08084BI-01

MATERIAL

FLAME RATING

SIZE
C

HINGED BASE W/INSERTS

REV
-

	NAME	DATE
DRAWN	D.M.F.	6/10/2019
CHECKED	-	12/31/2999

SCALE: 1:2

SHEET 1 OF 1

polycase
1305 CHESTER IND. PARKWAY AVON, OHIO 44011-1083 U.S.A.
PH#: 1-800-248-1233, 440-934-0444 FAX#: 440-934-0088

TOLERANCE CHART												
DIMENSION RANGE	0	.039	.118	.236	.394	.591	.866	1.181	1.575	2.087	2.756	3.543
	.039	.118	.236	.394	.591	.866	1.181	1.575	2.087	2.756	3.543	4.724
TOOL DEPENDENT	±.007	±.007	±.008	±.008	±.009	±.010	±.011	±.012	±.013	±.015	±.017	±.020
NON-TOOL DEPENDENT	±.003	±.004	±.004	±.004	±.005	±.006	±.007	±.008	±.009	±.011	±.013	±.016

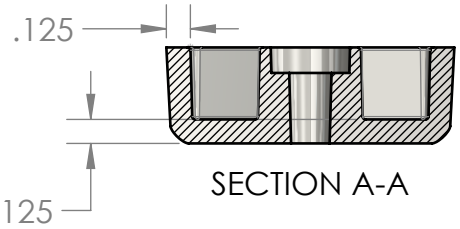

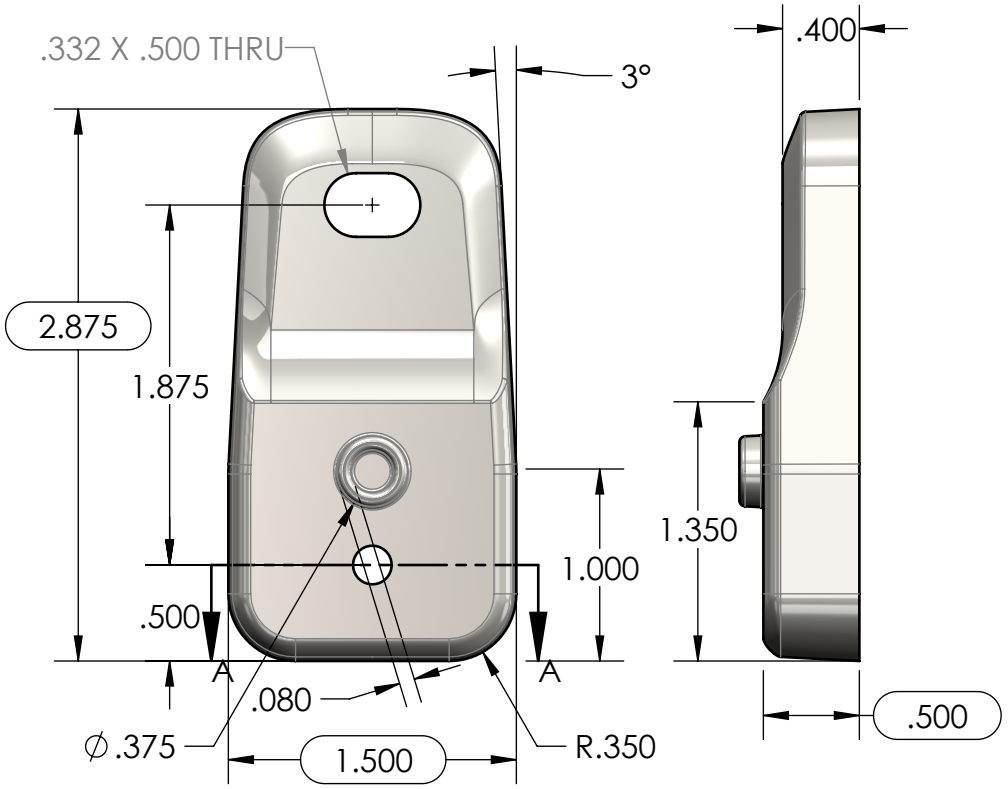

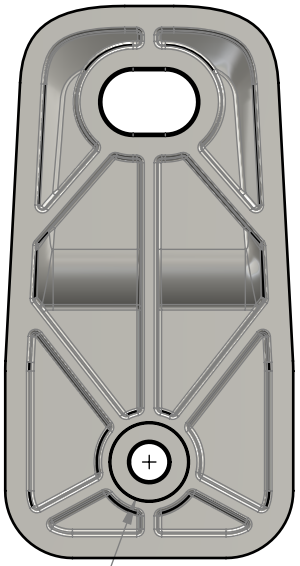

PART NUMBER: ZH-01F-01
MATERIAL: PC
MATERIAL SPEC: /PC/XXX/GY
COLOR: LIGHT GRAY
FLAME RATING: 5VA

NOTES:
1. REFER TO SOLID MODEL FOR COMPLETE PART DEFINITION.
2. (INSPECTION DIMENSION)
3. EJECTOR PINS TO BE FLUSH ±.010
4. FLASH .005 MAX
5. GATE TO BE REMOVED FLUSH ±.015

REV.	DESCRIPTION	ZONE	BY	APPR'D	DATE
REVISIONS					

UNLESS OTHERWISE SPECIFIED:
DIMENSIONS ARE IN: INCHES[mm]
TOLERANCES: ANGULAR: ±2°
TWO PLACE DECIMAL: ±.010
THREE PLACE DECIMAL: ±.005
PRINTED GRAPHICS: ±.010

PROPRIETARY AND CONFIDENTIAL
THE INFORMATION CONTAINED IN THIS DRAWING IS THE SOLE PROPERTY OF POLYCASE. ANY REPRODUCTION IN PART OR AS A WHOLE WITHOUT THE WRITTEN PERMISSION OF POLYCASE IS PROHIBITED.

CAD FILE: ZH-01F

PART NO.
ZH-01F-01

MATERIAL
PC

FLAME RATING
5VA

	NAME	DATE
DRAWN	D.M.F.	10/3/2019
CHECKED	B.M.B.	1/15/2019

polycase
1305 CHESTER IND. PARKWAY AVON, OHIO 44011-1083 U.S.A.
PH#: 1-800-248-1233, 440-934-0444 FAX#: 440-934-0088

SIZE A

MOUNTING FOOT

REV -

SCALE: 1:1

SHEET 1 OF 1

5 4 3 2 1

D C B A

TOLERANCE CHART															
DIMENSION RANGE	0	.039	.118	.236	.394	.591	.866	1.181	1.575	2.087	2.756	3.543	4.724	6.299	7.874
	.039	.118	.236	.394	.591	.866	1.181	1.575	2.087	2.756	3.543	4.724	6.299	7.874	9.843
TOOL DEPENDENT	±.007	±.007	±.008	±.008	±.009	±.010	±.011	±.012	±.013	±.015	±.017	±.020	±.024	±.028	±.035
NON-TOOL DEPENDENT	±.003	±.004	±.004	±.004	±.005	±.006	±.007	±.008	±.009	±.011	±.013	±.016	±.020	±.024	±.031

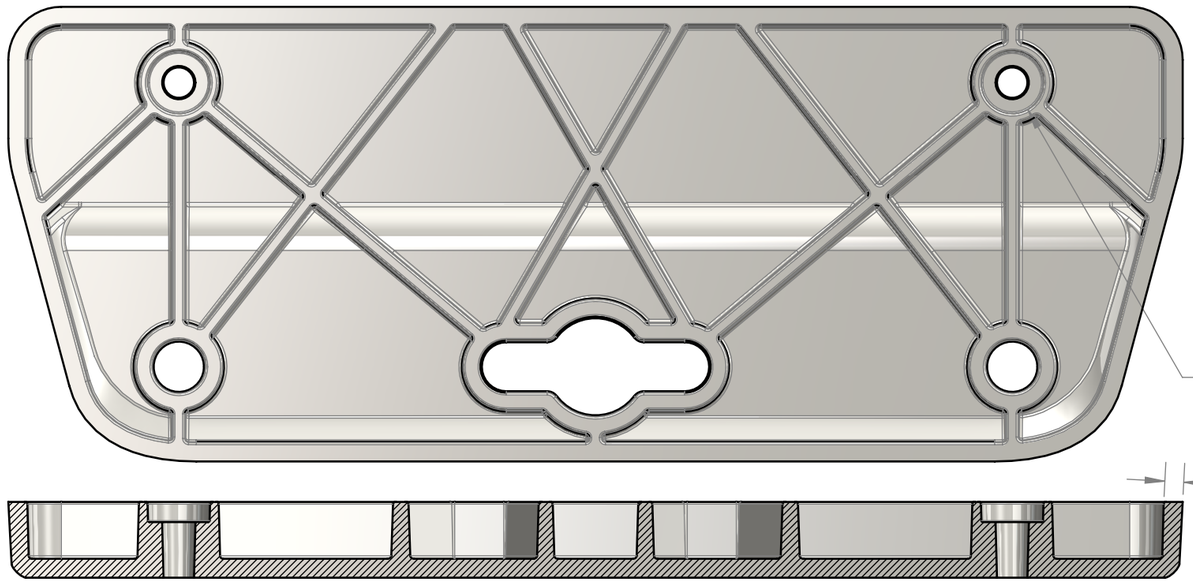

SECTION A-A

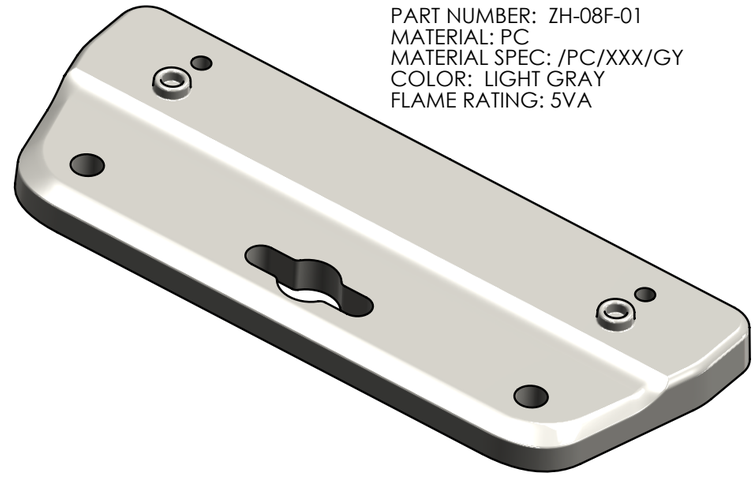

PART NUMBER: ZH-08F-01
MATERIAL: PC
MATERIAL SPEC: /PC/XXX/GY
COLOR: LIGHT GRAY
FLAME RATING: 5VA

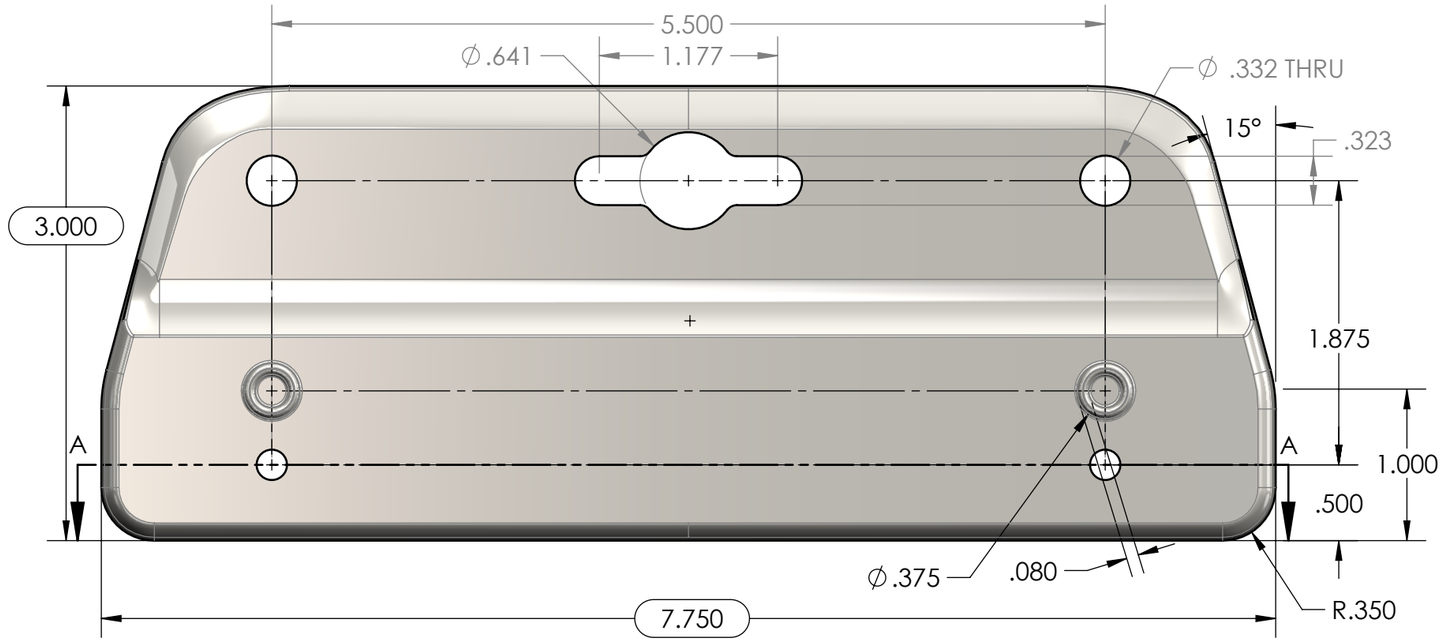

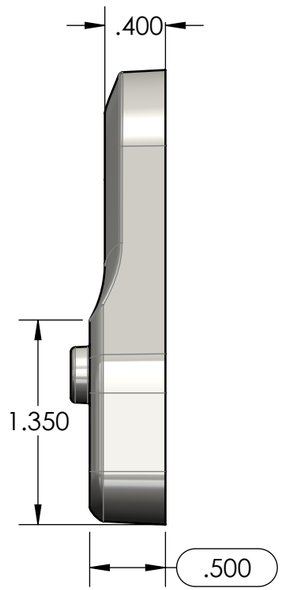

NOTES:
1. REFER TO SOLID MODEL FOR COMPLETE PART DEFINITION.
2. (INSPECTION DIMENSION)
3. EJECTOR PINS TO BE FLUSH ±.010
4. FLASH .005 MAX
5. GATE TO BE REMOVED FLUSH ±.015

REV.	DESCRIPTION	ZONE	BY	APPR'D	DATE
REVISIONS					

UNLESS OTHERWISE SPECIFIED:
DIMENSIONS ARE IN: INCHES[mm]
TOLERANCES: ANGULAR: ±2°
TWO PLACE DECIMAL: ±.010
THREE PLACE DECIMAL: ±.005
PRINTED GRAPHICS: ±.010

PROPRIETARY AND CONFIDENTIAL
THE INFORMATION CONTAINED IN THIS DRAWING IS THE SOLE PROPERTY OF POLYCASE. ANY REPRODUCTION IN PART OR AS A WHOLE WITHOUT THE WRITTEN PERMISSION OF POLYCASE IS PROHIBITED.

CAD FILE: ZH-08F

PART NO. ZH-08F-01
MATERIAL PC
FLAME RATING 5VA

	NAME	DATE
DRAWN	D.M.F.	1/25/2019
CHECKED	-	1/15/2019

SIZE B
SCALE: 1:1

polycase
1305 CHESTER IND. PARKWAY AVON, OHIO 44011-1083 U.S.A.
PH#: 1-800-248-1233, 440-934-0444 FAX#: 440-934-0088

MOUNTING FLANGE
REV -
SHEET 1 OF 1