BOM Table					
ITEM NO.	PART NUMBER	Rev.	Description	Material	QTY.
1	SB-34-02	-	SB ENCLOSURE, STEEL, HINGED DOOR, W/PANEL, GRAY		1
2	PK-125	-.03	POLE MOUNT KIT		1
2.1	SC-120	-.01	Strut Channel P4100SLPG	PRE-GALV STEEL	2
2.2	SW-001	-	Strut Channel Washer 1/4	304 SST	4
2.3	SCREWS-031		CR PHMS 0.25-20x0.75	SST	4
2.4	SN-001	-	Strut Channel NUT 1/4-20	316 SST	4
2.5	CL-01	1	Hose Clamp, 2" to 12.25" ID, 30 in.-lbs. Max Torque	201 SST, ZINC SCREW	2
2.6	N-006		NUT 3/8-16	SST	4
2.7	W-013		3/8 SAE WASHER, SST	SST	8
2.8	SCREWS-048		3/8-16 X .75 PHMS, PHILLIPS, SST	SST	4

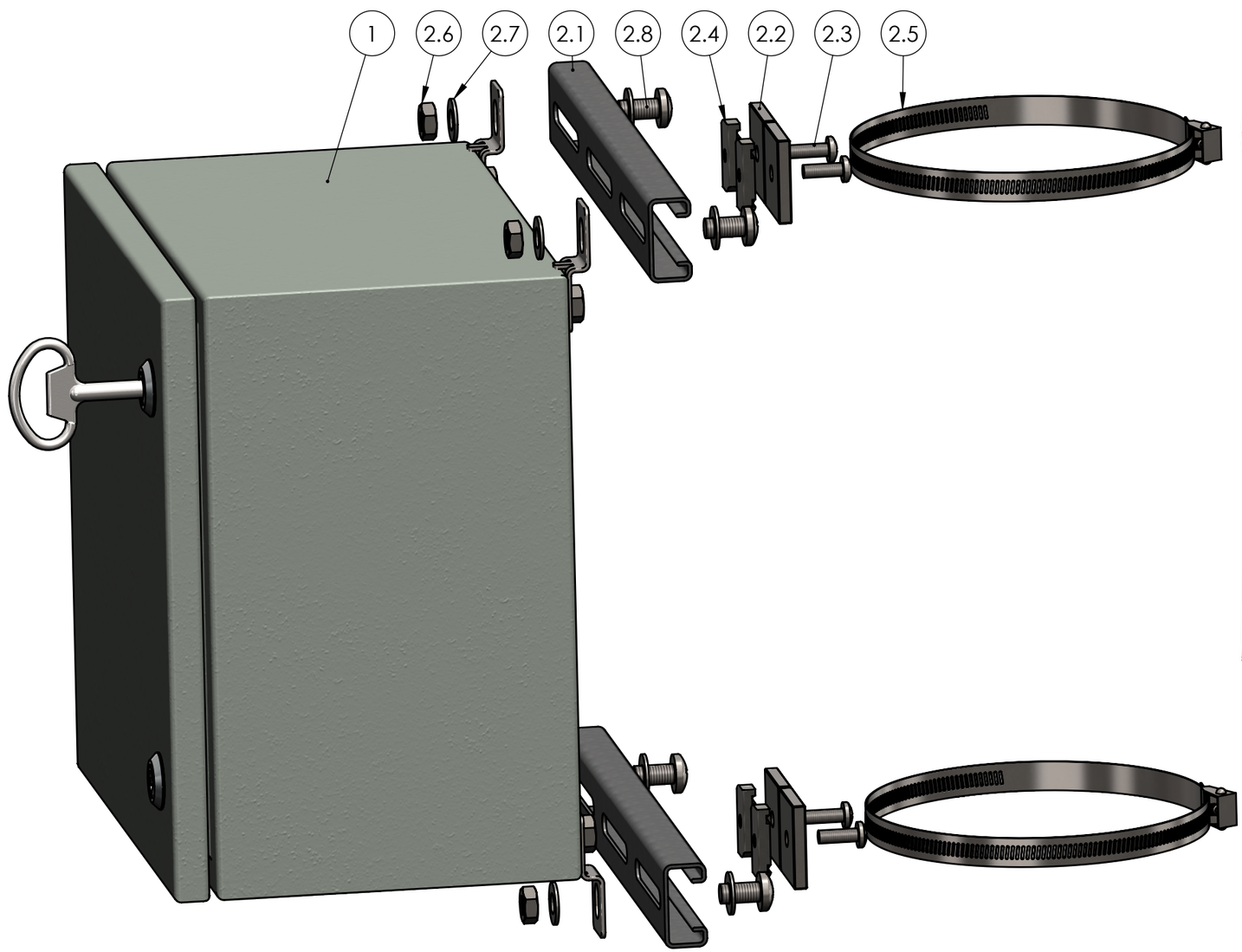

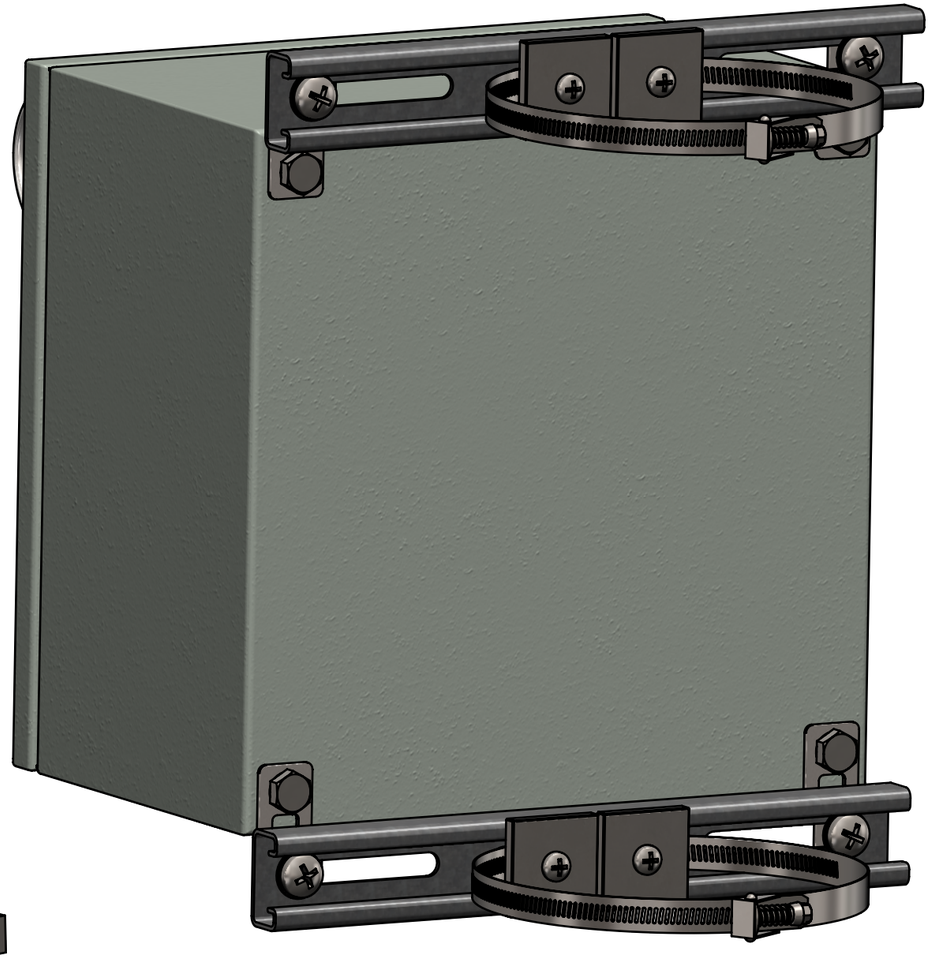

REV.	DESCRIPTION	ZONE	BY	APPR'D	DATE
REVISIONS					

UNLESS OTHERWISE SPECIFIED:
DIMENSIONS ARE IN: INCHES[mm]
TOLERANCES: ANGULAR: ±2°
TWO PLACE DECIMAL: ±.010
THREE PLACE DECIMAL: ±.005
PRINTED GRAPHICS: ±.010

PROPRIETARY AND CONFIDENTIAL
THE INFORMATION CONTAINED IN THIS DRAWING IS THE SOLE PROPERTY OF POLYCASE. ANY REPRODUCTION IN PART OR AS A WHOLE WITHOUT THE WRITTEN PERMISSION OF POLYCASE IS PROHIBITED.

CAD FILE: S_-34-PK

PART NO.
SB-34-PKW

MATERIAL

FLAME RATING

SIZE
B

REV
-

	NAME	DATE
DRAWN	D.M.F.	8/17/2018
CHECKED	-	10/24/2017

SCALE: 1:2.5

SHEET 1 OF 3

polycase
1305 CHESTER IND. PARKWAY AVON, OHIO 44011-1083 U.S.A.
PH#: 1-800-248-1233, 440-934-0444 FAX#: 440-934-0088

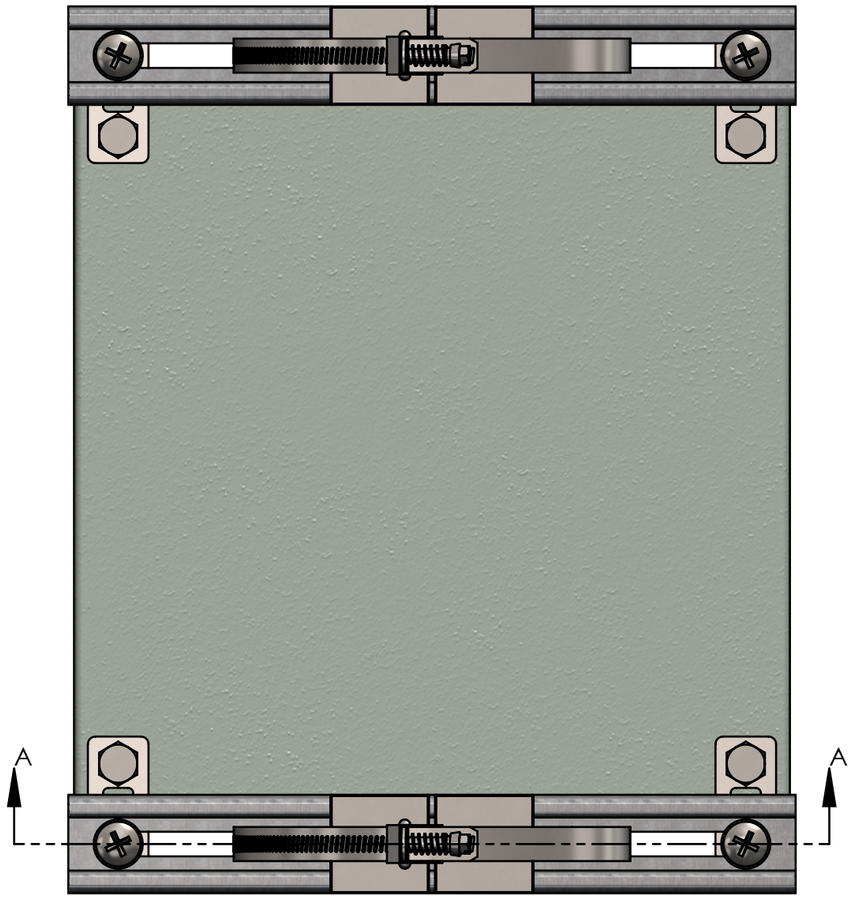

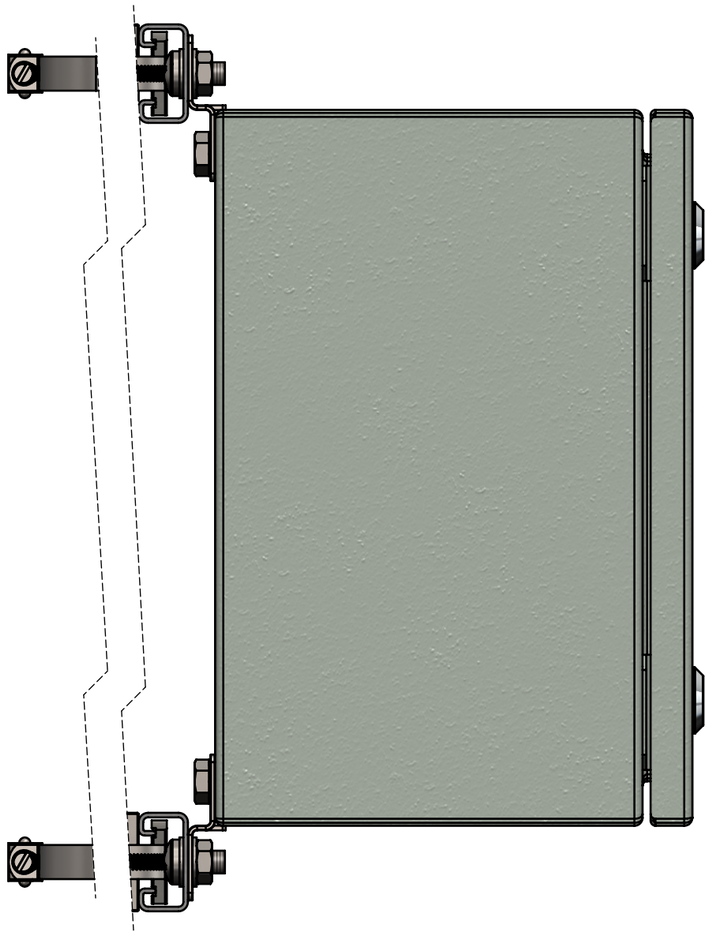

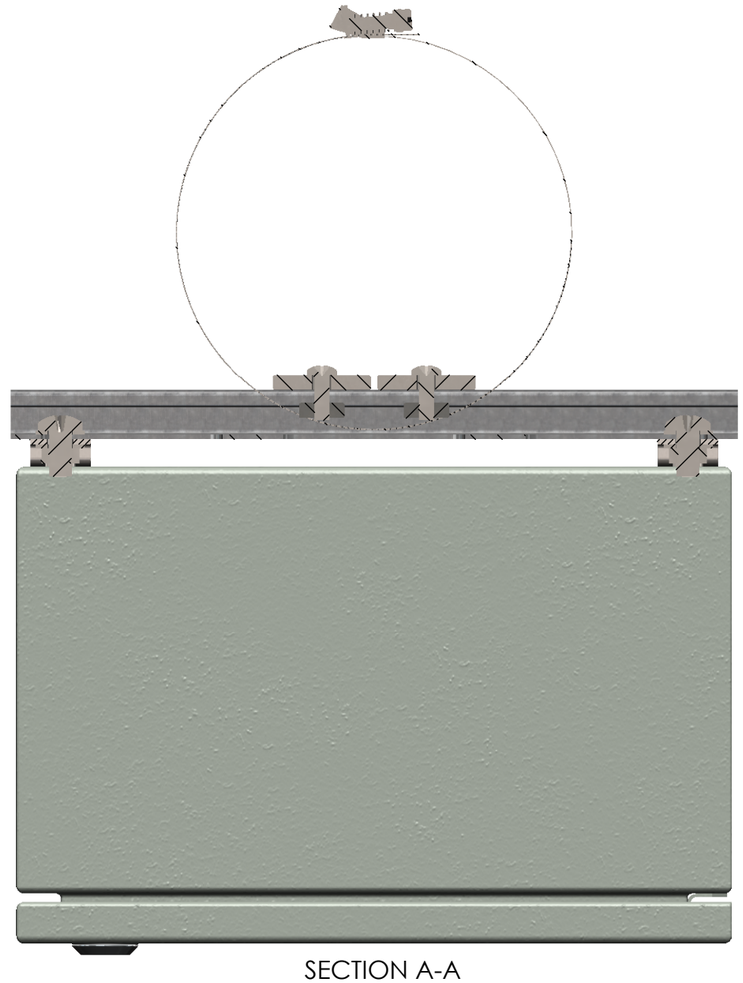

SECTION A-A

UNLESS OTHERWISE SPECIFIED: DIMENSIONS ARE IN: INCHES[mm] TOLERANCES: ANGULAR: ±2° TWO PLACE DECIMAL: ±.010 THREE PLACE DECIMAL: ±.005 PRINTED GRAPHICS: ±.010	PART NO. SB-34-PKW		polycase 1305 CHESTER IND. PARKWAY AVON, OHIO 44011-1083 U.S.A. PH#: 1-800-248-1233, 440-934-0444 FAX#: 440-934-0088
	MATERIAL		
PROPRIETARY AND CONFIDENTIAL THE INFORMATION CONTAINED IN THIS DRAWING IS THE SOLE PROPERTY OF POLYCASE. ANY REPRODUCTION IN PART OR AS A WHOLE WITHOUT THE WRITTEN PERMISSION OF POLYCASE IS PROHIBITED.	FLAME RATING	SIZE B	REV -
	NAME / DATE		
CAD FILE: S_-34-PK	DRAWN D.M.F. 8/17/2018 CHECKED - 10/24/2017	SCALE: 1:2.5	SHEET 2 OF 3

BOM Table					
ITEM NO.	PART NUMBER	Rev.	Description	Material	QTY.
1	SB-34-02	-	SB ENCLOSURE, STEEL, HINGED DOOR, W/PANEL, GRAY		1
2	PK-163	-.03	POLE MOUNT KIT		1
2.1	SC-160	-.01	Strut Channel P4100SLPG	PRE-GALV STEEL	2
2.2	SW-001	-	Strut Channel Washer 1/4	304 SST	4
2.3	SCREWS-031		CR PHMS 0.25-20x0.75	SST	4
2.4	SN-001	-	Strut Channel NUT 1/4-20	316 SST	4
2.5	CL-01	1	Hose Clamp, 2" to 12.25" ID, 30 in.-lbs. Max Torque	201 SST, ZINC SCREW	2
2.6	N-006		NUT 3/8-16	SST	4
2.7	W-013		3/8 SAE WASHER, SST	SST	8
2.8	SCREWS-048		3/8-16 X .75 PHMS, PHILLIPS, SST	SST	4

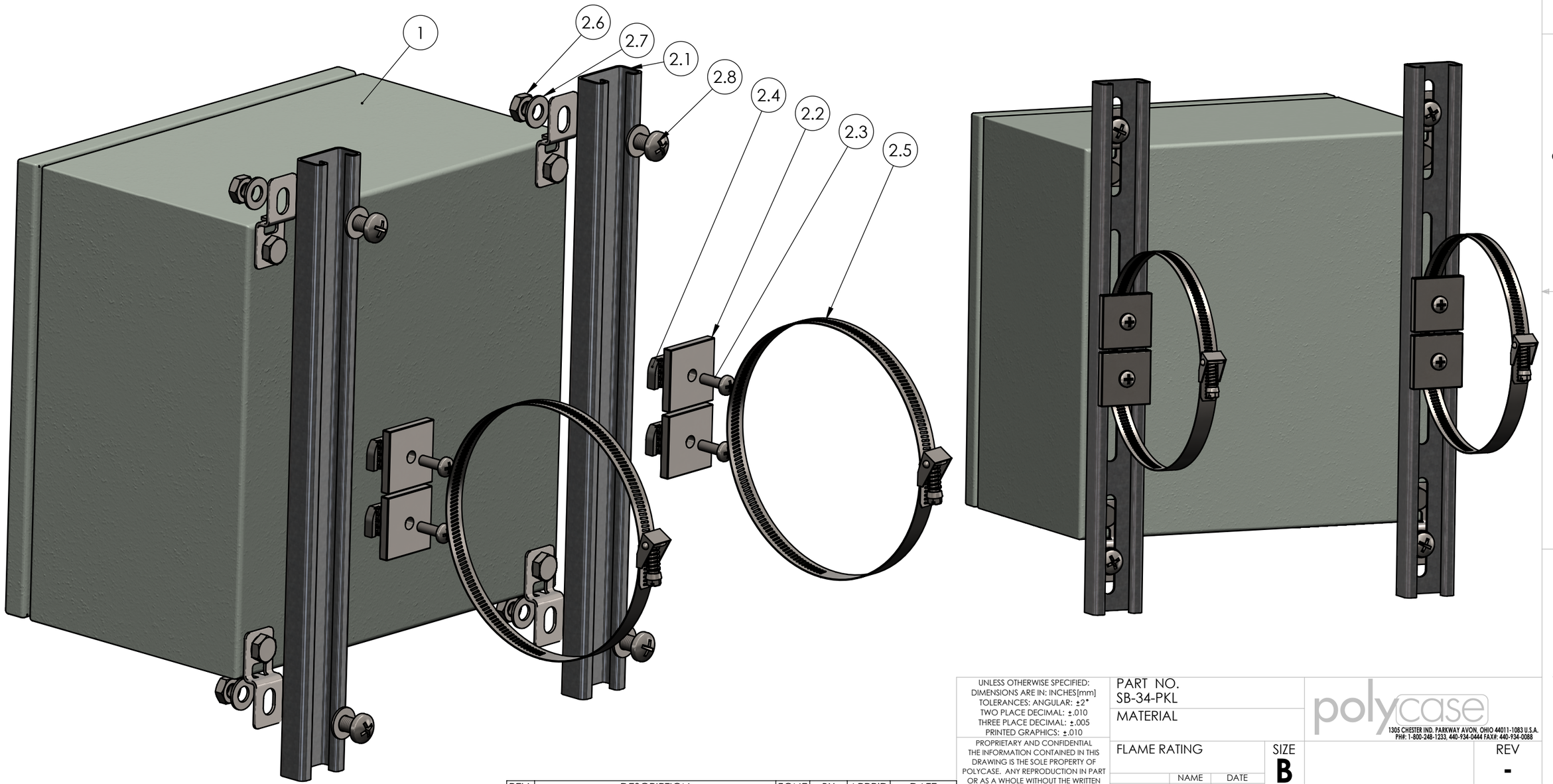

REV.	DESCRIPTION	ZONE	BY	APPR'D	DATE
REVISIONS					

UNLESS OTHERWISE SPECIFIED:
DIMENSIONS ARE IN: INCHES[mm]
TOLERANCES: ANGULAR: ±2°
TWO PLACE DECIMAL: ±.010
THREE PLACE DECIMAL: ±.005
PRINTED GRAPHICS: ±.010

PROPRIETARY AND CONFIDENTIAL
THE INFORMATION CONTAINED IN THIS DRAWING IS THE SOLE PROPERTY OF POLYCASE. ANY REPRODUCTION IN PART OR AS A WHOLE WITHOUT THE WRITTEN PERMISSION OF POLYCASE IS PROHIBITED.

CAD FILE: S_-34-PK

PART NO.
SB-34-PKL

MATERIAL

FLAME RATING

SIZE
B

REV
-

	NAME	DATE
DRAWN	D.M.F.	8/17/2018
CHECKED	-	10/24/2017

SCALE: 1:2.5

SHEET 3 OF 3

polycase
1305 CHESTER IND. PARKWAY AVON, OHIO 44011-1083 U.S.A.
PH#: 1-800-248-1233, 440-934-0444 FAX#: 440-934-0088