BOM Table					
ITEM NO.	PART NUMBER	Rev.	Description	Material	QTY.
1	SC-160	-.01	Strut Channel P4100SLPG	PRE-GALV STEEL	2
2	SN-001	-	Strut Channel NUT 1/4-20	316 SST	4
3	CL-01	1	Hose Clamp, 2" to 12.25" ID, 30 in.-lbs. Max Torque	201 SST, ZINC SCREW	2
4	SW-001	-	Strut Channel Washer 1/4	304 SST	4
5	SCREWS-031		CR PHMS 0.25-20x0.75	SST	4
6	SCREWS-049		10-32 X 3/8 PHILIPS, PAN, SST	SST	4
7	W-002		WASHER #10 X .734 X .04	SST	4

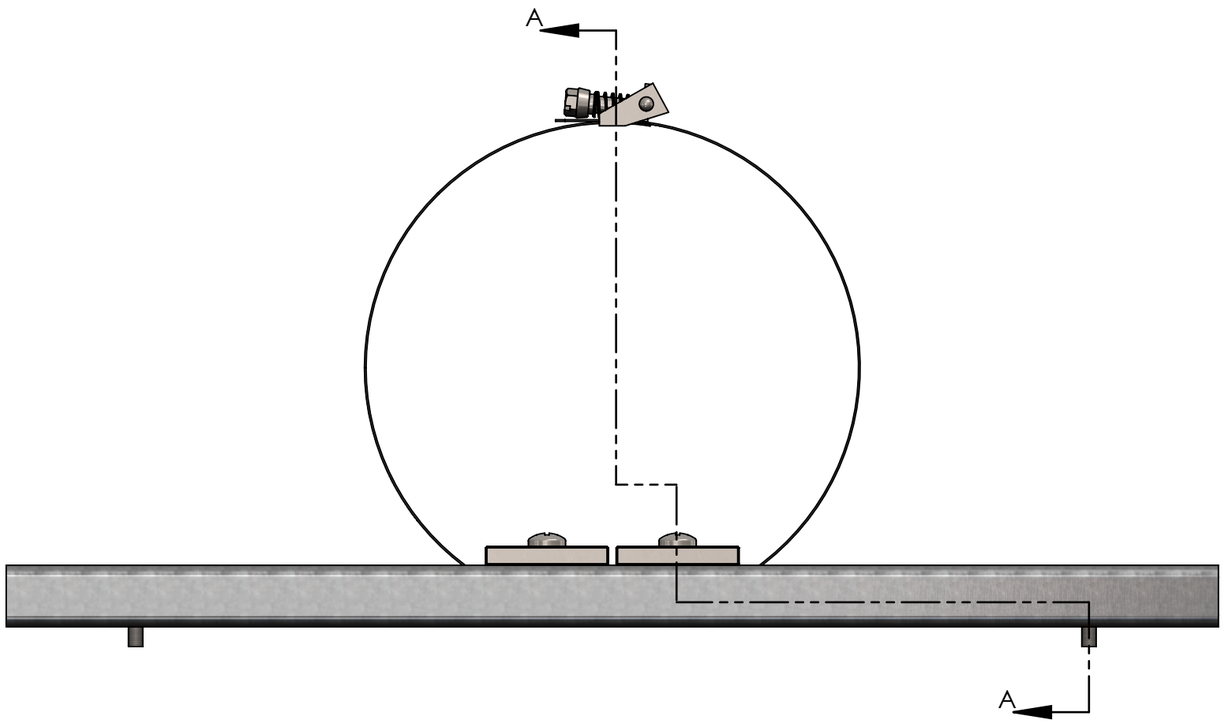

SECTION A-A

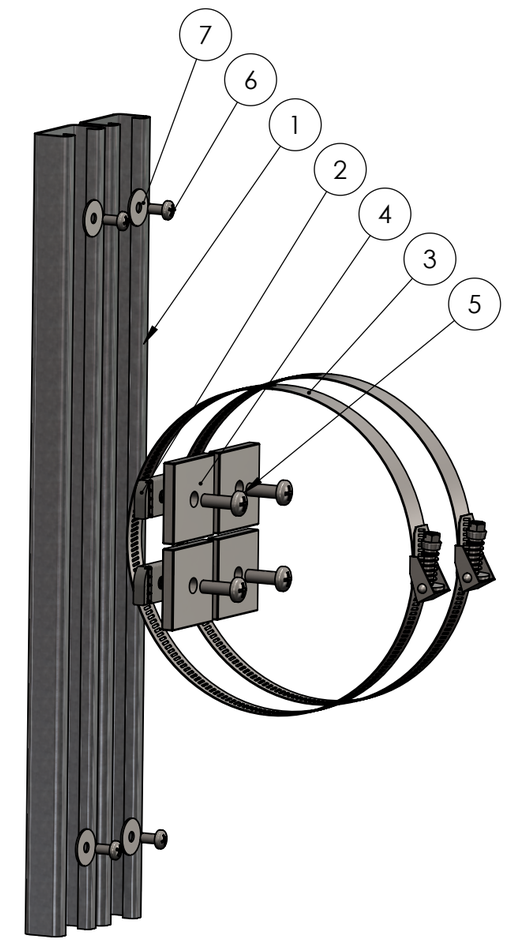

REV.	DESCRIPTION	ZONE	BY	APPR'D	DATE
	REVISIONS				

UNLESS OTHERWISE SPECIFIED:
DIMENSIONS ARE IN: INCHES[mm]
TOLERANCES: ANGULAR: ±2°
TWO PLACE DECIMAL: ±.010
THREE PLACE DECIMAL: ±.005
PRINTED GRAPHICS: ±.010

PROPRIETARY AND CONFIDENTIAL
THE INFORMATION CONTAINED IN THIS DRAWING IS THE SOLE PROPERTY OF POLYCASE. ANY REPRODUCTION IN PART OR AS A WHOLE WITHOUT THE WRITTEN PERMISSION OF POLYCASE IS PROHIBITED.

CAD FILE: PK-164

PART NO.
PK-164

MATERIAL

FLAME RATING

	NAME	DATE
DRAWN	D.M.F.	1/6/2020
CHECKED	B.M.B.	1/16/2020

SIZE
B

SCALE: 1:2

polycase
1305 CHESTER IND. PARKWAY AVON, OHIO 44011-1083 U.S.A.
PH#: 1-800-248-1233, 440-934-0444 FAX#: 440-934-0088

POLE MOUNT KIT

REV
-

SHEET 1 OF 1