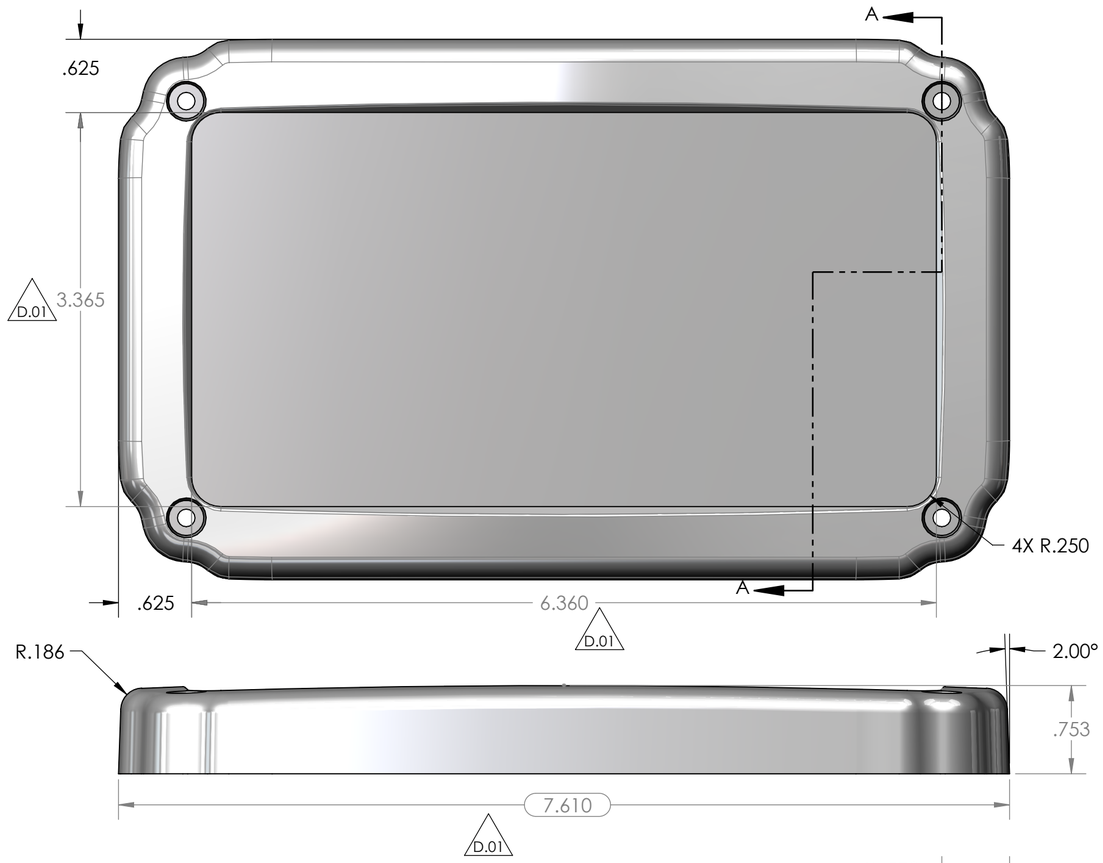

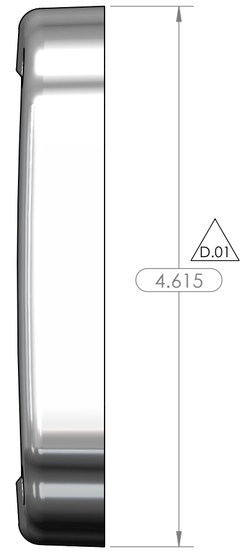

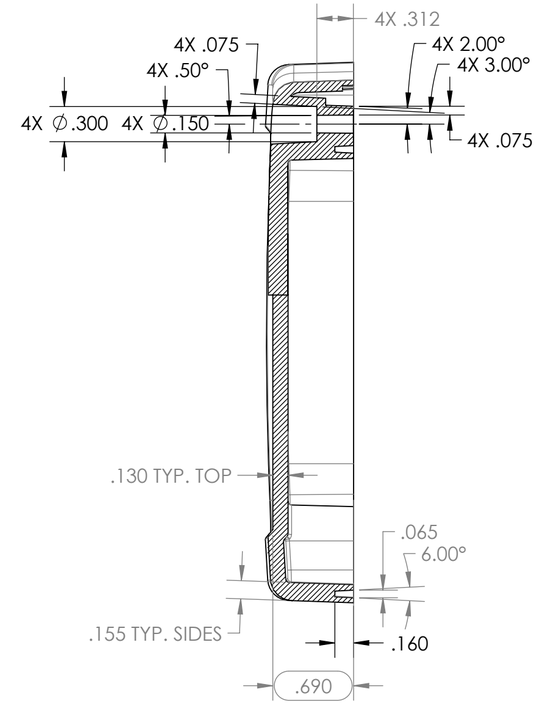

SECTION A-A

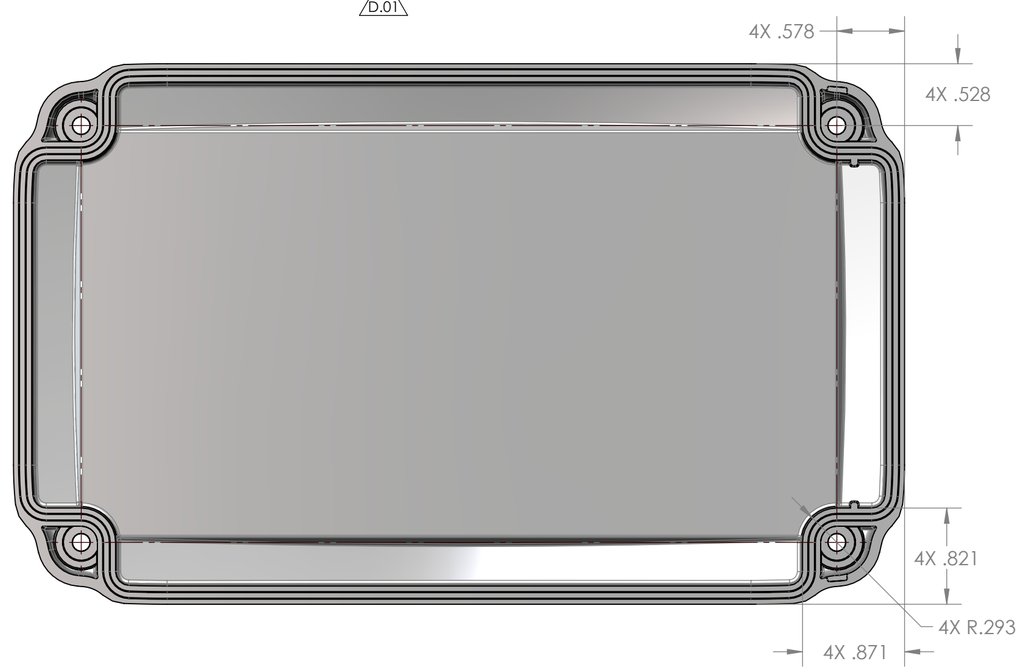

PART NUMBER: ML-47C
MATERIAL: PC
MATERIAL SPEC:
COLOR: BLACK
FLAME RATING: UL94V-0

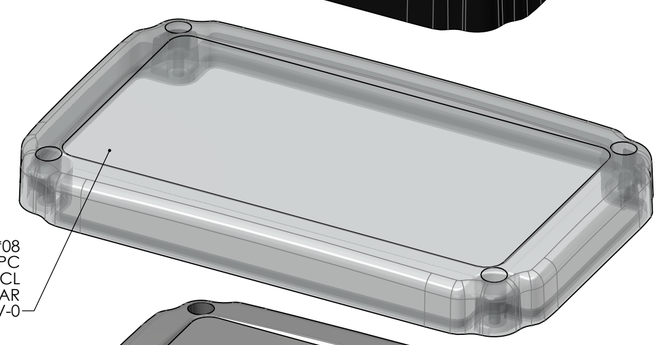

PART NUMBER: ML-47C*08
MATERIAL: PC
MATERIAL SPEC: /PC/XXX/CL
COLOR: CLEAR
FLAME RATING: UL94V-0

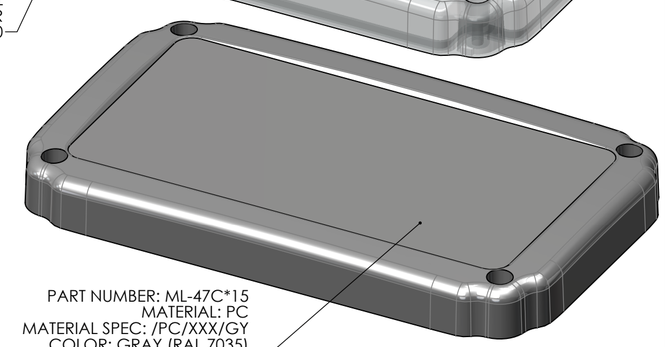

PART NUMBER: ML-47C*15
MATERIAL: PC
MATERIAL SPEC: /PC/XXX/GY
COLOR: GRAY (RAL 7035)
FLAME RATING: UL94V-0

NOTES:
1. REFER TO SOLID MODEL FOR COMPLETE PART DEFINITION.
2. FINISH: A2
3. INSPECTION DIMENSION
4. FLASH .005 MAX
5. GATE MUST BE ±.015

DIMENSION RANGE	0	.039	.118	.236	.394	.591	.866	1.181	1.575	2.087	2.756	3.543	4.724	6.299	7.874	9.843
	.039	.118	.236	.394	.591	.866	1.181	1.575	2.087	2.756	3.543	4.724	6.299	7.874	9.843	12.402
TOOL DEPENDENT	±.007	±.007	±.008	±.008	±.009	±.010	±.011	±.012	±.013	±.015	±.017	±.020	±.024	±.028	±.035	.043
NON-TOOL DEPENDENT	±.003	±.004	±.004	±.004	±.005	±.006	±.007	±.008	±.009	±.011	±.013	±.016	±.020	±.024	±.031	.039

TOLERANCE CHART

REV.	ZONE	DESCRIPTION	BY	APPR'D	DATE
1		REVISED FOR NEW MOLD, REMOVED GATE MARK	D.M.F.		7/19/2021
-.01	D3	ADDED BLACK VERSION	D.M.F.	B.M.B.	11/11/2016
-		PRODUCTION RELEASE	D.M.F.	D.M.F.	3/20/2012
D.01	D5, D6, E3, E7, F5	NOTE 6: ADDED TOLERNACE ADDED GATE MARK 7.610 WAS 7.625 4.615 WAS 4.625 6.360 WAS 6.375 3.365 WAS 3.375	D.M.F.	B.M.B.	2/1/2012
D		RELEASED FOR SAMPLE	D.M.F.	B.M.B.	11/15/2011

REVISIONS

UNLESS OTHERWISE SPECIFIED:
DIMENSIONS ARE IN: INCHES[mm]
TOLERANCES: ANGULAR: ±.5°
TWO PLACE DECIMAL: ±-
THREE PLACE DECIMAL: ±-
PRINTED GRAPHICS: ±.010

PROPRIETARY AND CONFIDENTIAL
THE INFORMATION CONTAINED IN THIS DRAWING IS THE SOLE PROPERTY OF POLYCASE. ANY REPRODUCTION IN PART OR AS A WHOLE WITHOUT THE WRITTEN PERMISSION OF POLYCASE IS PROHIBITED.

CAD FILE: ML-47C

PART NO.
ML-47C

MATERIAL
-

FLAME RATING
-

SIZE
C

COVER

REV
0

	NAME	DATE
DRAWN	D.M.F.	10/3/2011
CHECKED	B.M.B.	12/1/2011

SCALE: 1:1

SHEET 1 OF 1

polycase
1305 CHESTER IND. PARKWAY AVON, OHIO 44011-1083 U.S.A.
PH#: 1-800-248-1233, 440-934-0444 FAX#: 440-934-0088