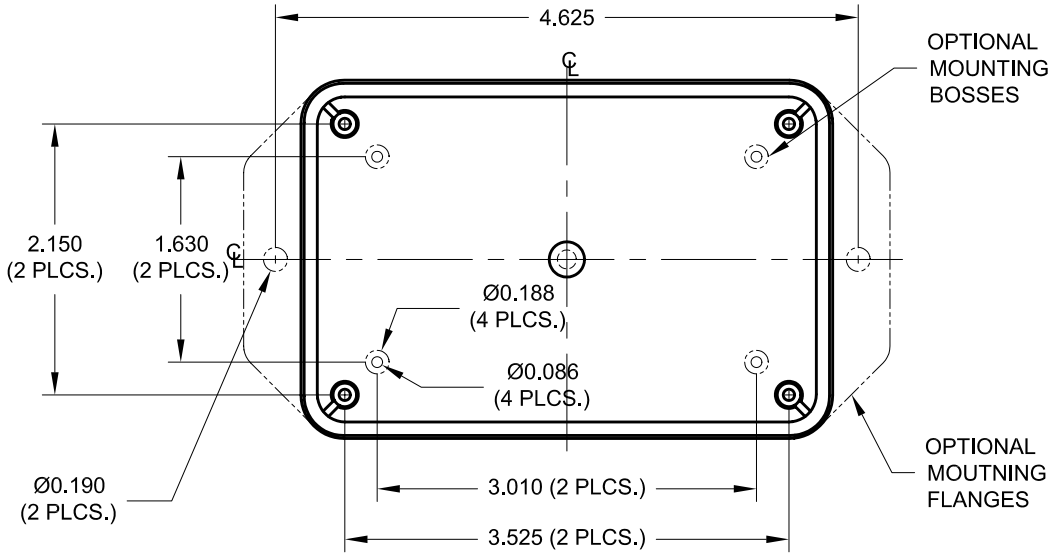

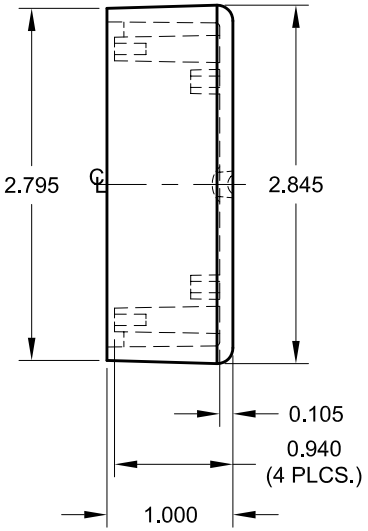

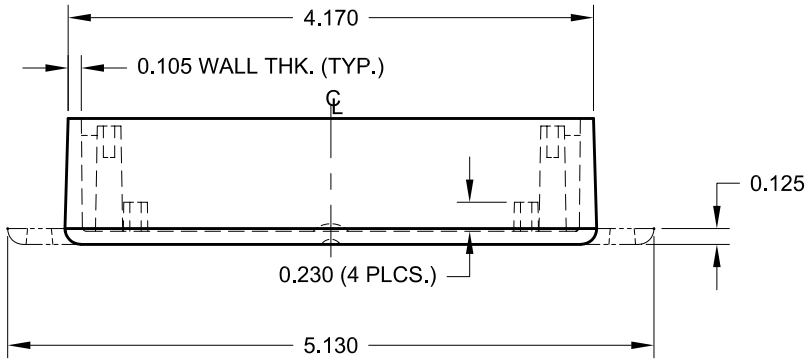

NOTES:

1.) PC BOARD BOSSSES WILL ACCEPT A
#4 X 1/4" THREAD FORMING SCREW
(SCREWS AVAILABLE FROM POLYCASE)

REV	DESCRIPTION	BY	CHK	DATE

POLYCASE™
YOUR PERFECT FIT

TOLERANCES UNLESS OTHERWISE SPECIFIED
X.XX ±.020
X.XXX ±.010

1305 CHESTER IND. PARKWAY AVON, OHIO 44011 U.S.A.
PH# 1-800-248-1233, 440-934-0444 FAX# 440-934-0088

THIS DRAWING AND THE INFORMATION CONTAINED ARE THE PROPERTY OF PLYCASE AND IT IS NOT TO BE REPRODUCED, COPIED OR USED IN ANY WAY DETRIMENTAL TO THE INTEREST OF POLYCASE.

DRWN BY	APP. BY	SCALE	DATE:
M.M.T.	B.B.	FULL	07/17/00

JOB NO:	PRODUCT:
-	LP-31B
-	-

CUSTOMER:

TITLE: PRODUCT DETAIL DRAWING

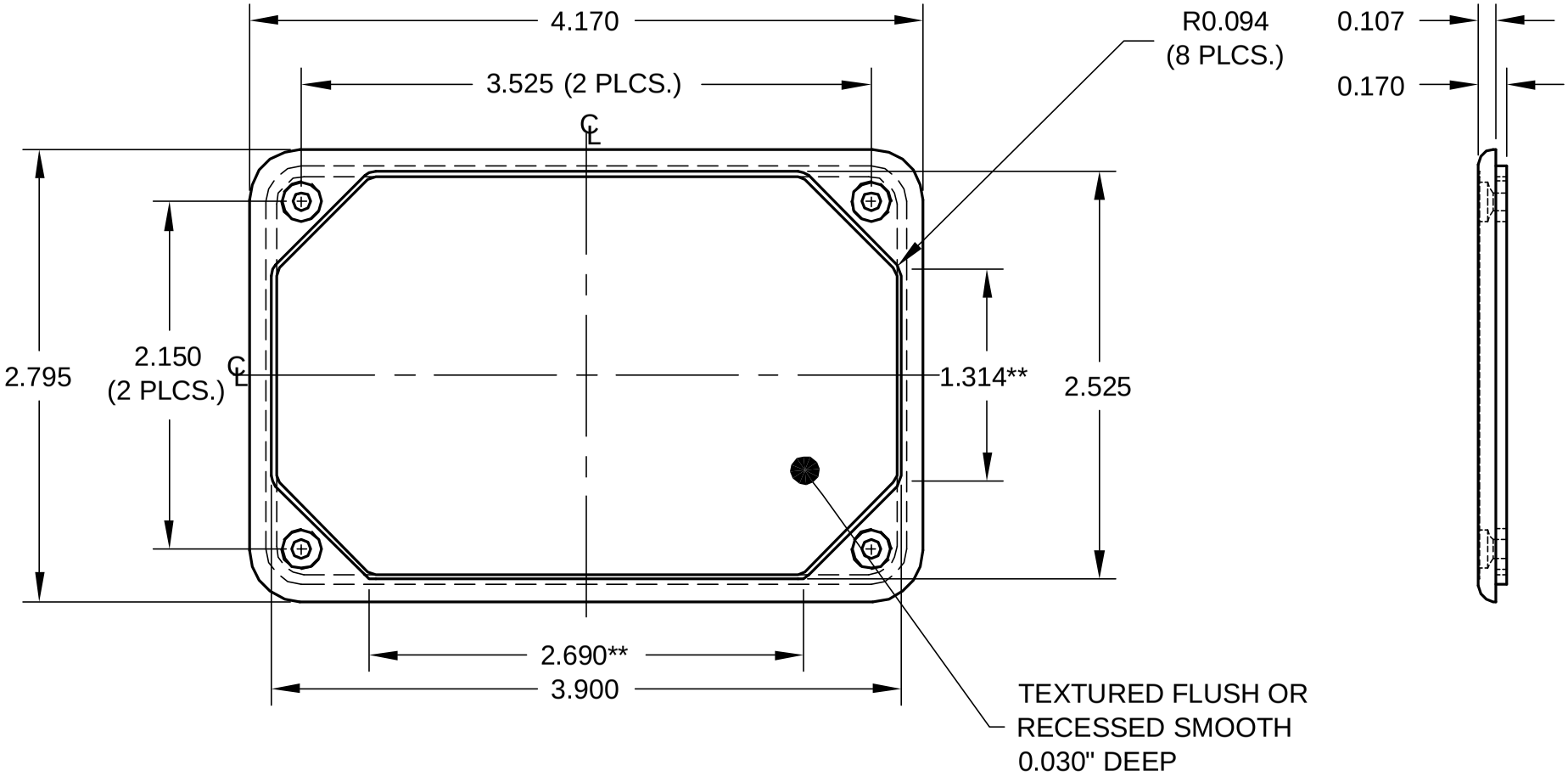

NOTES:
1) ** DIMENSIONS TO TYPICAL SHARP CORNER

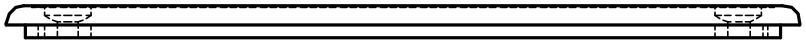

REV	DESCRIPTION	BY	CHK	DATE

POLYCASE™
YOUR PERFECT FIT

TOLERANCES UNLESS OTHERWISE SPECIFIED
X.XX ±.020
X.XXX ±.010

1305 CHESTER IND. PARKWAY AVON, OHIO 44011 U.S.A.
PH# 1-800-248-1233, 440-934-0444 FAX# 440-934-0088

THIS DRAWING AND THE INFORMATION CONTAINED ARE THE PROPERTY OF PLYCASE AND IT IS NOT TO BE REPRODUCED, COPIED OR USED IN ANY WAY DETRIMENTAL TO THE INTEREST OF POLYCASE.

DRWN BY	APP. BY	SCALE:	DATE:
M.M.T.	B.B.	FULL	08/17/00

JOB NO: - -

PRODUCT: - LP-31C

CUSTOMER:

TITLE: PRODUCT DETAIL DRAWING