BOM Table							
ITEM NO.	PART NUMBER	DESCRIPTION	Material	FlameRating	Color	HD-36FMMT/QTY.	HD-36FMMT*15/QTY.
1	HD-35BFMB	BASE, W/FLANGES & PCB BOSSES	PC	5VA	BLACK	1	-
2	HD-36CMBT	COVER, TEXTURED RECESS, W/PCB BOSSES, W/BRASS INSERTS	PC	5VA	BLACK	1	-
3	GASKET-35*08	GASKET	SILICONE		CLEAR	1	1
4	HD-35BFMB*15	BASE, W/FLANGES & PCB BOSSES	PC	5VA	GRAY (RAL 7035)	-	1
5	HD-36CMBT*15	COVER, TEXTURED RECESS, W/PCB BOSSES, W/BRASS INSERTS	PC	5VA	GRAY (RAL 7035)	-	1
6	SCREWS-SS7/8	4-40 X .875 LG PAN PHILLIPS MACHINE SCREW	SS			4	4

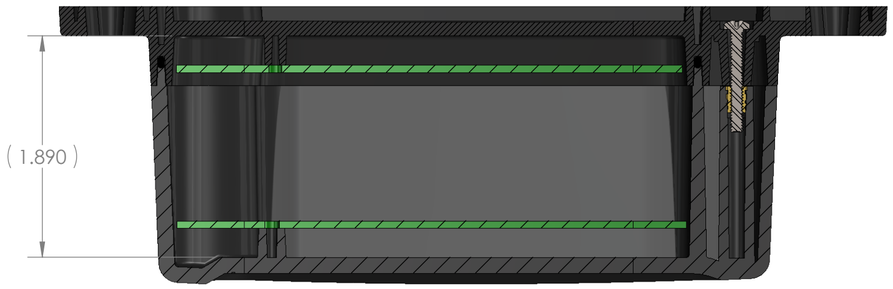

SECTION A-A

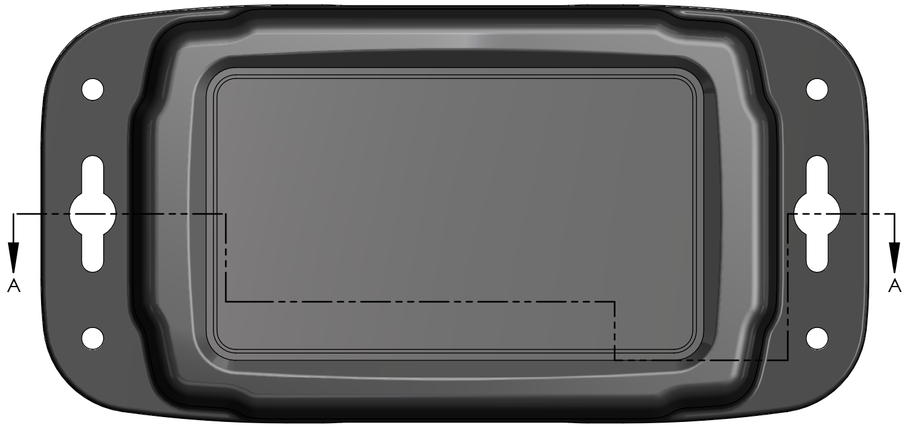

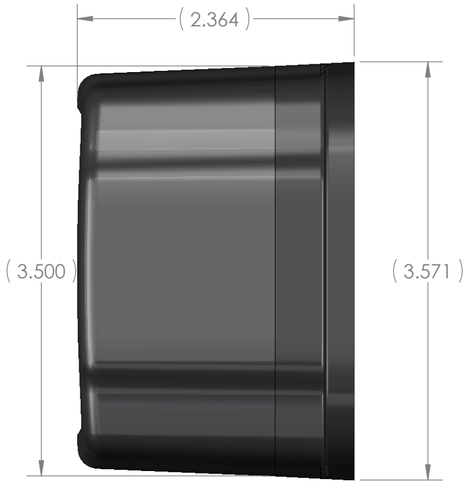

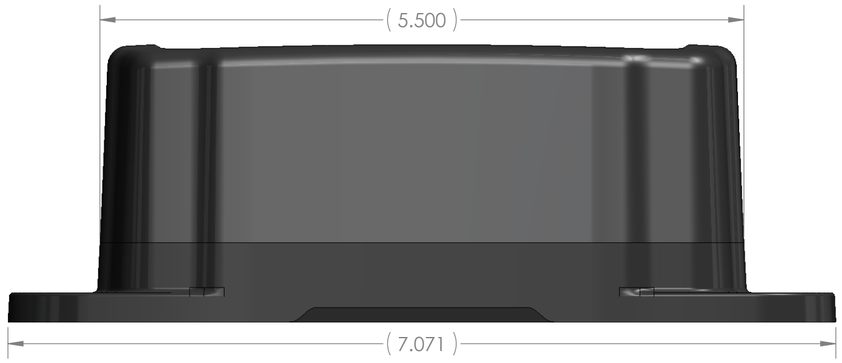

PART NUMBER:
HD-36FMMT

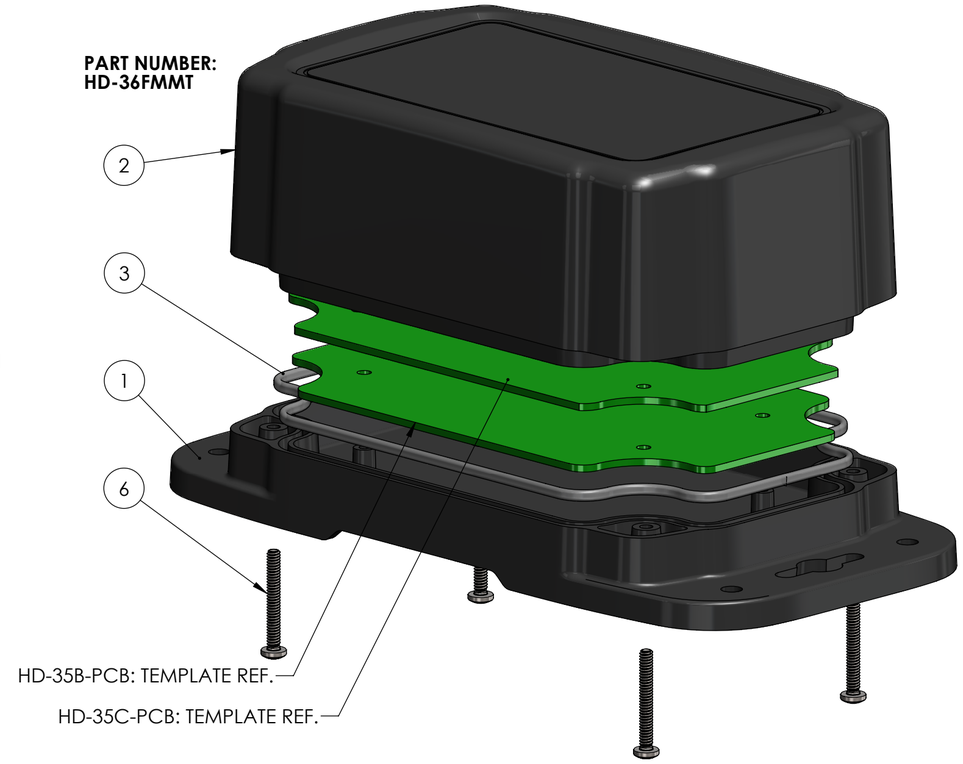

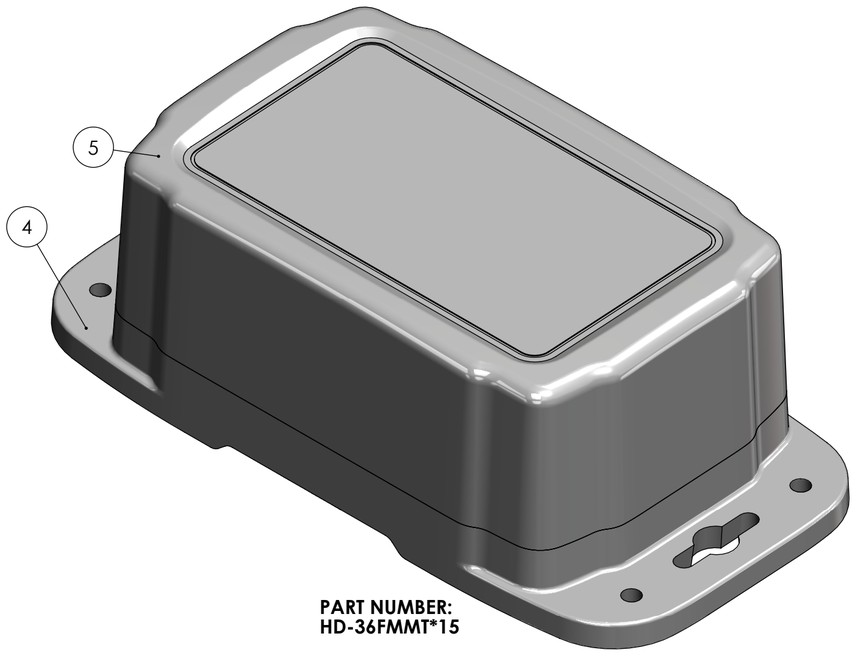

PART NUMBER:
HD-36FMMT*15

NOTES:
1. RECOMMENDED TORQUE SETTING FOR ASSEMBLY SCREWS: 6.25 IN-LBS

REV.	DESCRIPTION	ZONE	BY	APPR'D	DATE
REVISIONS					

UNLESS OTHERWISE SPECIFIED:
DIMENSIONS ARE IN: INCHES[mm]
TOLERANCES: ANGULAR: ±2°
TWO PLACE DECIMAL: ±.030
THREE PLACE DECIMAL: ±.015
PRINTED GRAPHICS: ±.010

PROPRIETARY AND CONFIDENTIAL
THE INFORMATION CONTAINED IN THIS DRAWING IS THE SOLE PROPERTY OF POLYCASE. ANY REPRODUCTION IN PART OR AS A WHOLE WITHOUT THE WRITTEN PERMISSION OF POLYCASE IS PROHIBITED.
CAD FILE: HD-36FMMT

PART NO.
HD-36FMMT

MATERIAL

FLAME RATING
5VA

	NAME	DATE
DRAWN	D.M.F.	2/11/2020
CHECKED	-	1/13/2010

SIZE **C**

SCALE: 1:1

HD-35 ASM

REV **-**

SHEET 1 OF 1

polycase
1306 CHESTER IND. PARKWAY AVON, OHIO 44011-1083 U.S.A.
PH#: 1-800-248-1233, 440-934-5444 FAX#: 440-934-0088

TOLERANCE CHART																				
DIMENSION RANGE	0	.039	.118	.236	.394	.591	.866	1.181	1.575	2.087	2.756	3.543	4.724	6.299	7.874	9.843	12.402	15.748	19.685	24.803	31.496
	.039	.118	.236	.394	.591	.866	1.181	1.575	2.087	2.756	3.543	4.724	6.299	7.874	9.843	12.402	15.748	19.685	24.803	31.496	39.37
TOOL DEPENDENT	±.007	±.007	±.008	±.008	±.009	±.010	±.011	±.012	±.013	±.015	±.017	±.020	±.024	±.028	±.035	.043	.051	.063	.079	.098	.118
NON-TOOL DEPENDENT	±.003	±.004	±.004	±.004	±.005	±.006	±.007	±.008	±.009	±.011	±.013	±.016	±.020	±.024	±.031	.039	.047	.059	.075	.094	.114

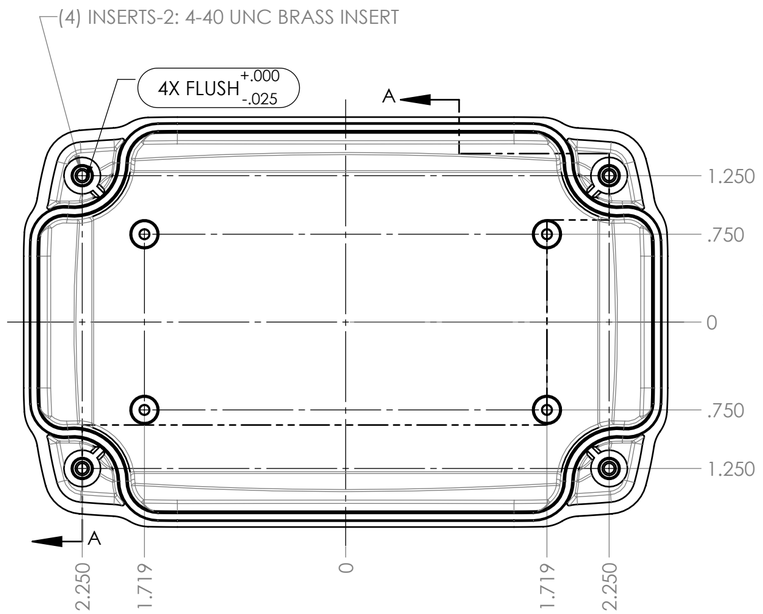

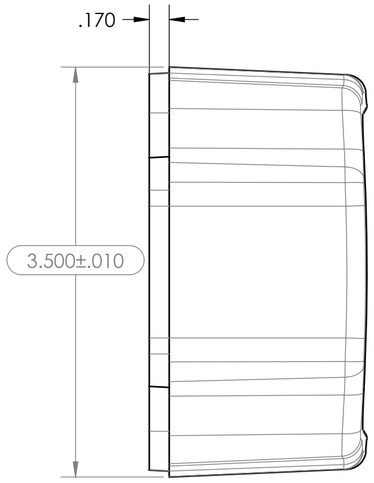

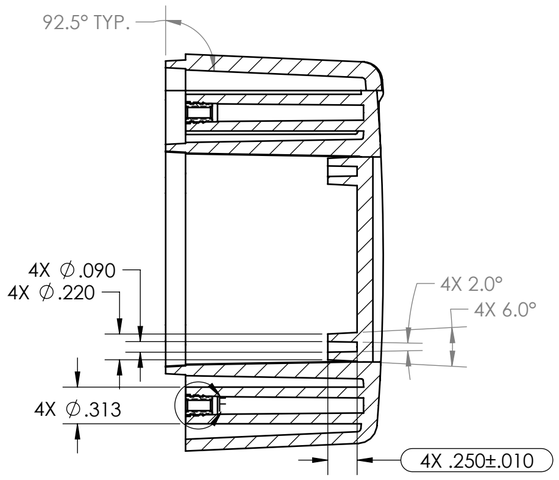

SECTION A-A

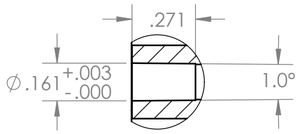

DETAIL F
SCALE 2 : 1

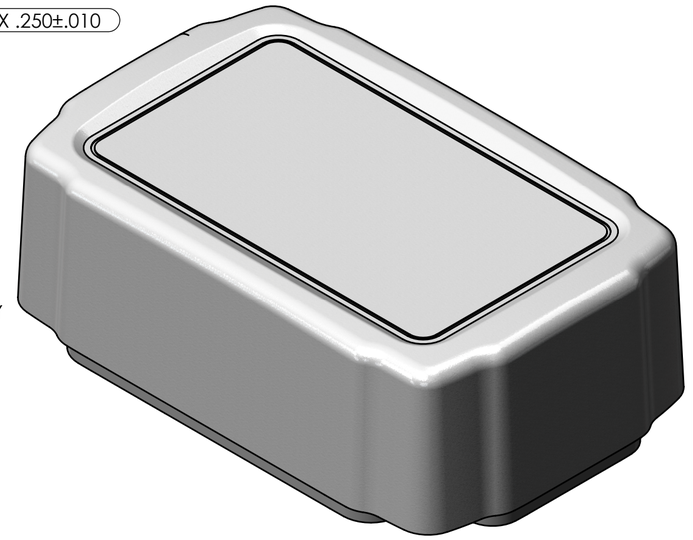

PART No: HD-36CMBT*15
MATERIAL: PC
MATERIAL SPEC: /PC/XXX/GY
COLOR: GRAY (RAL 7035)
FLAME RATING: 5VA

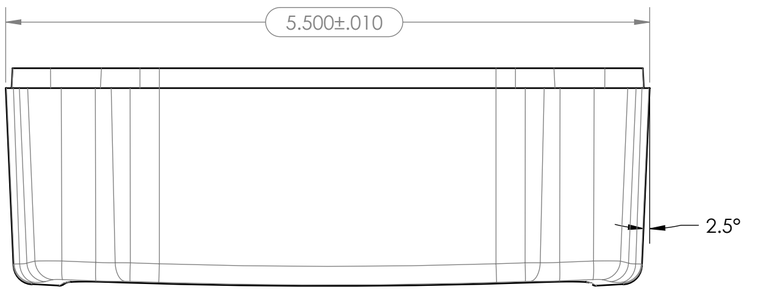

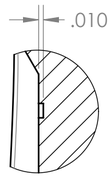

DETAIL C
SCALE 4 : 1

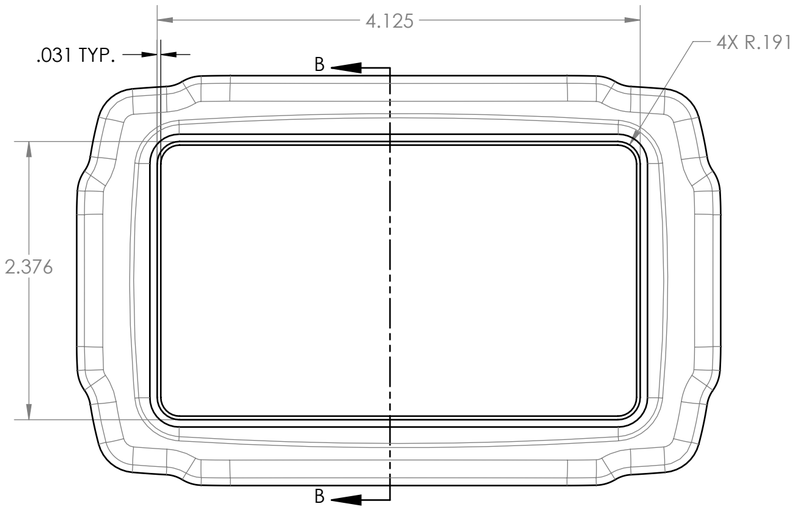

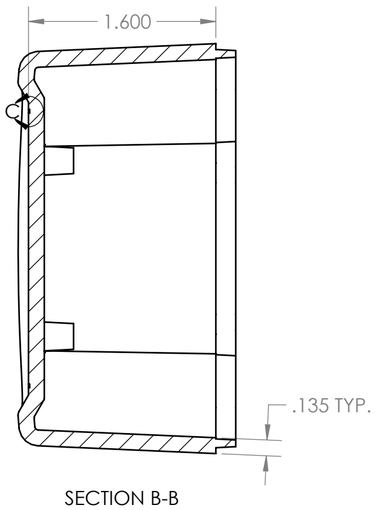

SECTION B-B

PART No: HD-36CMBT
MATERIAL: PC
MATERIAL SPEC: /PC/XXX/BK
COLOR: BLACK
FLAME RATING: 5VA

NOTES:
1. (INSPECTION DIMENSION)
2. EJECTOR PINS TO BE FLUSH ±.010
3. FLASH .005 MAX
4. GATE MUST BE FLUSH ±.010

REV.	DESCRIPTION	ZONE	BY	APPR'D	DATE
REVISIONS					

UNLESS OTHERWISE SPECIFIED:
DIMENSIONS ARE IN: INCHES[mm]
TOLERANCES: ANGULAR: ±2°
TWO PLACE DECIMAL: ±.030
THREE PLACE DECIMAL: ±.015
PRINTED GRAPHICS: ±.010

PROPRIETARY AND CONFIDENTIAL
THE INFORMATION CONTAINED IN THIS DRAWING IS THE SOLE PROPERTY OF POLYCASE. ANY REPRODUCTION IN PART OR AS A WHOLE WITHOUT THE WRITTEN PERMISSION OF POLYCASE IS PROHIBITED.

CAD FILE: HD-36CMBT

PART NO.
HD-36CMBT

MATERIAL
PC

FLAME RATING
5VA

	NAME	DATE
DRAWN	D.M.F.	2/11/2020
CHECKED	B.M.B.	4/15/2020

SIZE C

SCALE: 1:1

polycase
1305 CHESTER IND. PARKWAY AVON, OHIO 44011-1083 U.S.A.
PH#: 1-800-248-1233, 440-934-2444 FAX#: 440-934-0088

COVER, TEXTURED RECESS, W/PCB BOSSES, W/BRASS INSERTS

REV -

SHEET 1 OF 1

TOLERANCE CHART																				
DIMENSION RANGE	0	.039	.118	.236	.394	.591	.866	1.181	1.575	2.087	2.756	3.543	4.724	6.299	7.874	9.843	12.402	15.748	19.685	24.803	31.496
	.039	.118	.236	.394	.591	.866	1.181	1.575	2.087	2.756	3.543	4.724	6.299	7.874	9.843	12.402	15.748	19.685	24.803	31.496	39.37
TOOL DEPENDENT	±.007	±.007	±.008	±.008	±.009	±.010	±.011	±.012	±.013	±.015	±.017	±.020	±.024	±.028	±.035	.043	.051	.063	.079	.098	.118
NON-TOOL DEPENDENT	±.003	±.004	±.004	±.004	±.005	±.006	±.007	±.008	±.009	±.011	±.013	±.016	±.020	±.024	±.031	.039	.047	.059	.075	.094	.114

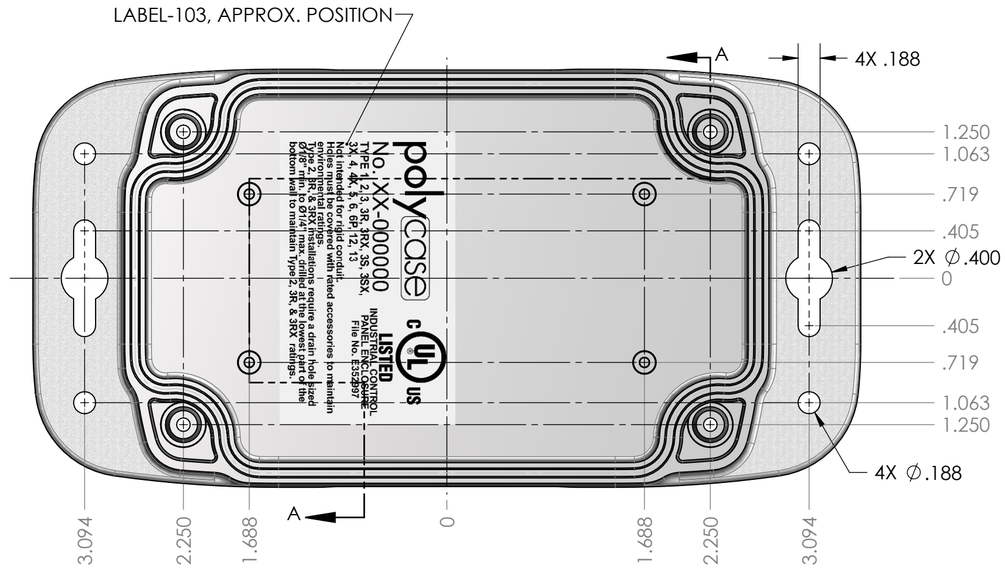

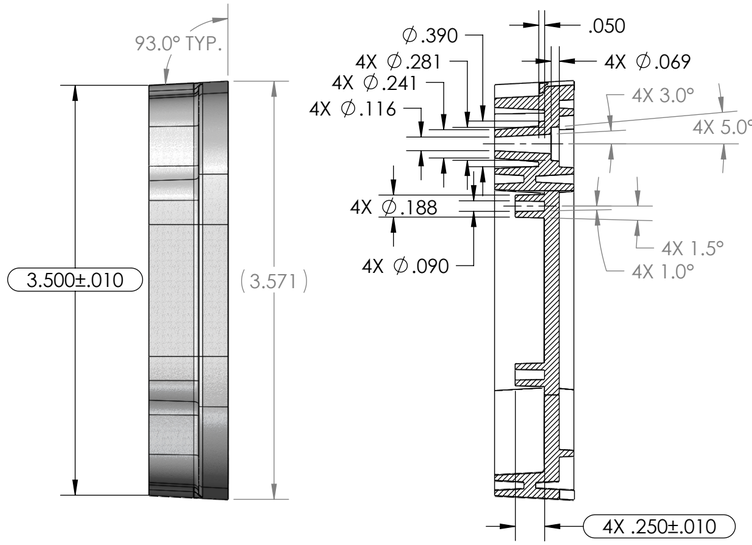

SECTION A-A

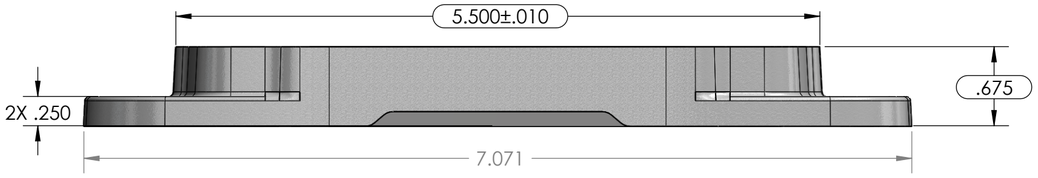

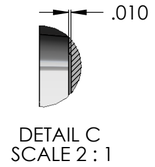

DETAIL C
SCALE 2 : 1

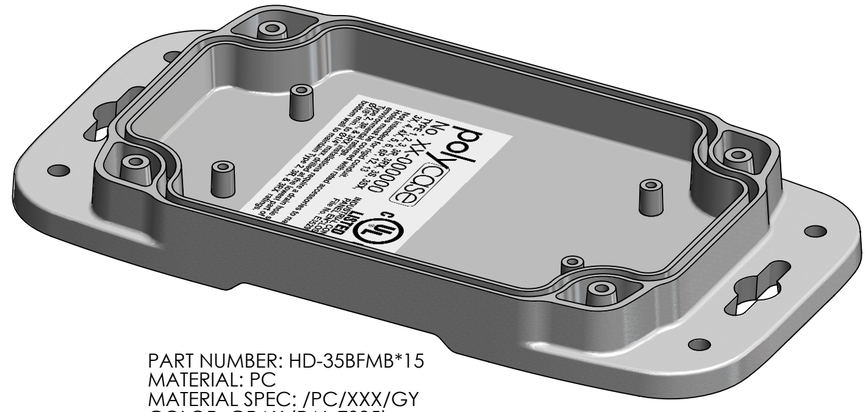

PART NUMBER: HD-35BFMB*15
MATERIAL: PC
MATERIAL SPEC: /PC/XXX/GY
COLOR: GRAY (RAL 7035)
FLAME RATING: 5VA

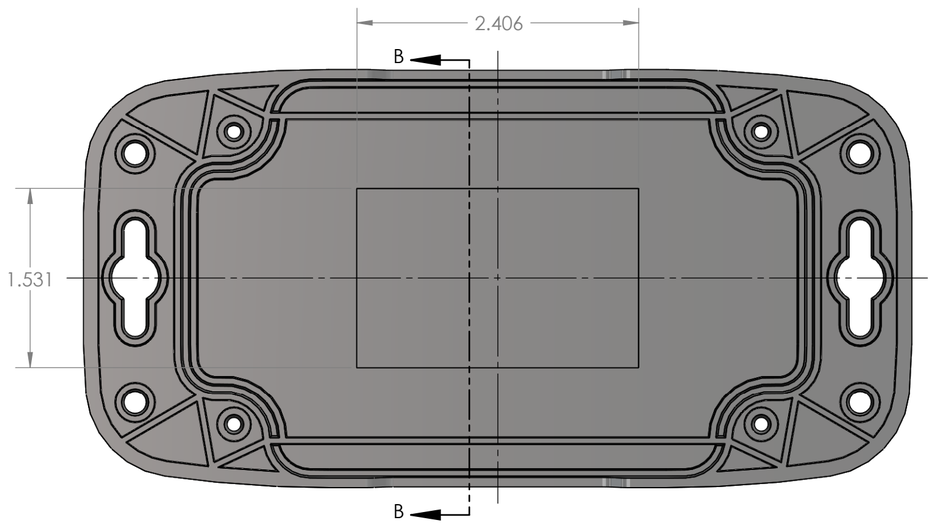

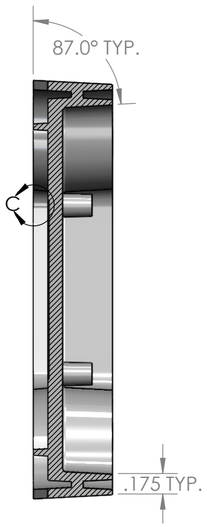

SECTION B-B

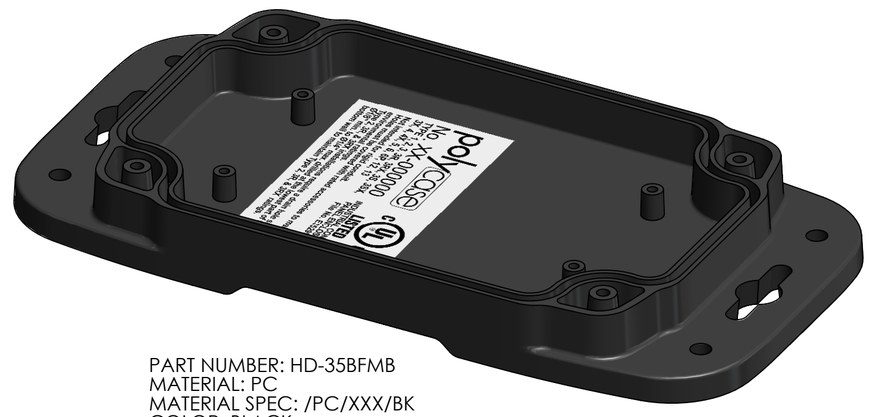

PART NUMBER: HD-35BFMB
MATERIAL: PC
MATERIAL SPEC: /PC/XXX/BK
COLOR: BLACK
FLAME RATING: 5VA

NOTES:
1. (INSPECTION DIMENSION)
2. EJECTOR PINS TO BE FLUSH ±.010
3. FLASH .005 MAX
4. GATE MUST BE FLUSH ±.030

REVISIONS					
REV.	DESCRIPTION	ZONE	BY	APPR'D	DATE
-.03	MATERIAL /PC/XXX/BK WAS /PC/P1310FR/BK, FLAME RATING 5VA WAS UL94V-0		D.M.F.	C.C.B.	1/10/2019
-.02	ADDED GRAY VERSION		D.M.F.		1/13/2014
-.01	UPDATED SHEET FORMAT		D.M.F.	D.M.F.	4/8/2011
-	PRELIMINARY RELEASE		D.M.F.	B.M.B.	1/13/2010

UNLESS OTHERWISE SPECIFIED:
DIMENSIONS ARE IN: INCHES[mm]
TOLERANCES: ANGULAR: ±2°
TWO PLACE DECIMAL: ±.03
THREE PLACE DECIMAL: ±.
PRINTED GRAPHICS: ±.010
PROPRIETARY AND CONFIDENTIAL
THE INFORMATION CONTAINED IN THIS DRAWING IS THE SOLE PROPERTY OF POLYCASE. ANY REPRODUCTION IN PART OR AS A WHOLE WITHOUT THE WRITTEN PERMISSION OF POLYCASE IS PROHIBITED.
CAD FILE: HD-35BFMB

	NAME	DATE
DRAWN	D.M.F.	
CHECKED	B.M.B.	

PART NO.
HD-35BFMB*15

MATERIAL
PC

FLAME RATING
5VA

SIZE
C

SCALE: 1:1

polycase
1305 CHESTER IND. PARKWAY AVON, OHIO 44011-1083 U.S.A.
PH#: 1-800-248-1233, 440-934-0444 FAX#: 440-934-0088

BASE, W/FLANGES & PCB BOSSES

REV
-.02

SHEET 1 OF 1

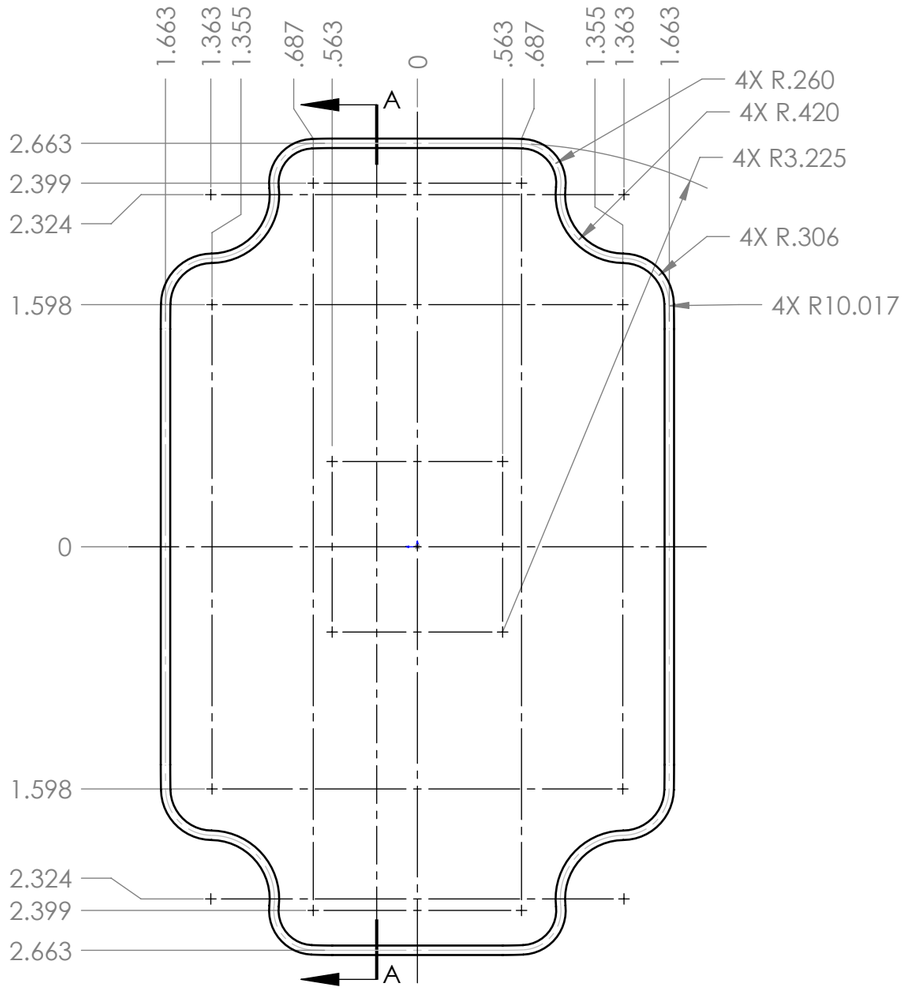

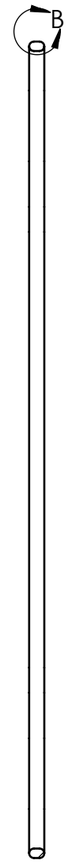

SECTION A-A

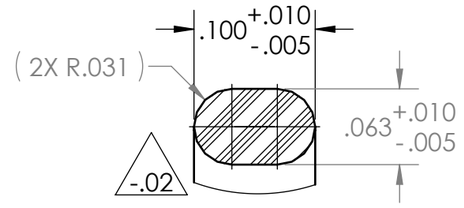

DETAIL B
SCALE 8 : 1

NOTES:
1. COLOR: CLEAR
2. MATERIAL SPEC:
   Momentive Performance Mat'ls TSE221-3U
3. (INSPECTION DIMENSION)
4. TOLERANCES UNLESS OTHERWISE SPECIFIED ±.5%

REV.	DESCRIPTION	ZONE	BY	APPR'D	DATE
-.02	UPDATED MATERIAL, UPDATED TOLERANCES	B1	D.M.F.	C.C.B.	1/10/2019
-.01	UPDATED SHEET FORMAT		D.M.F.	D.M.F.	4/8/2011
-	PRELIMINARY RELEASE		D.M.F.	B.M.B.	1/13/2010

REVISIONS

UNLESS OTHERWISE SPECIFIED:
DIMENSIONS ARE IN: INCHES[mm]
TOLERANCES: ANGULAR: ±2°
TWO PLACE DECIMAL: ±.030
THREE PLACE DECIMAL: ±.015
PRINTED GRAPHICS: ±.010

PROPRIETARY AND CONFIDENTIAL
THE INFORMATION CONTAINED IN THIS DRAWING IS THE SOLE PROPERTY OF POLYCASE. ANY REPRODUCTION IN PART OR AS A WHOLE WITHOUT THE WRITTEN PERMISSION OF POLYCASE IS PROHIBITED.

CAD FILE: Gasket-35

PART NO.
GASKET-35*08

MATERIAL
SILICONE

FLAME RATING

	NAME	DATE
DRAWN	D.M.F.	10/5/2009
CHECKED	B.M.B.	1/13/2010

polycase
1305 CHESTER IND. PARKWAY AVON, OHIO 44011-1083 U.S.A.
PH#: 1-800-248-1233, 440-934-0444 FAX#: 440-934-0088

SIZE B

GASKET

REV -.02

SCALE: 1:1

SHEET 1 OF 1

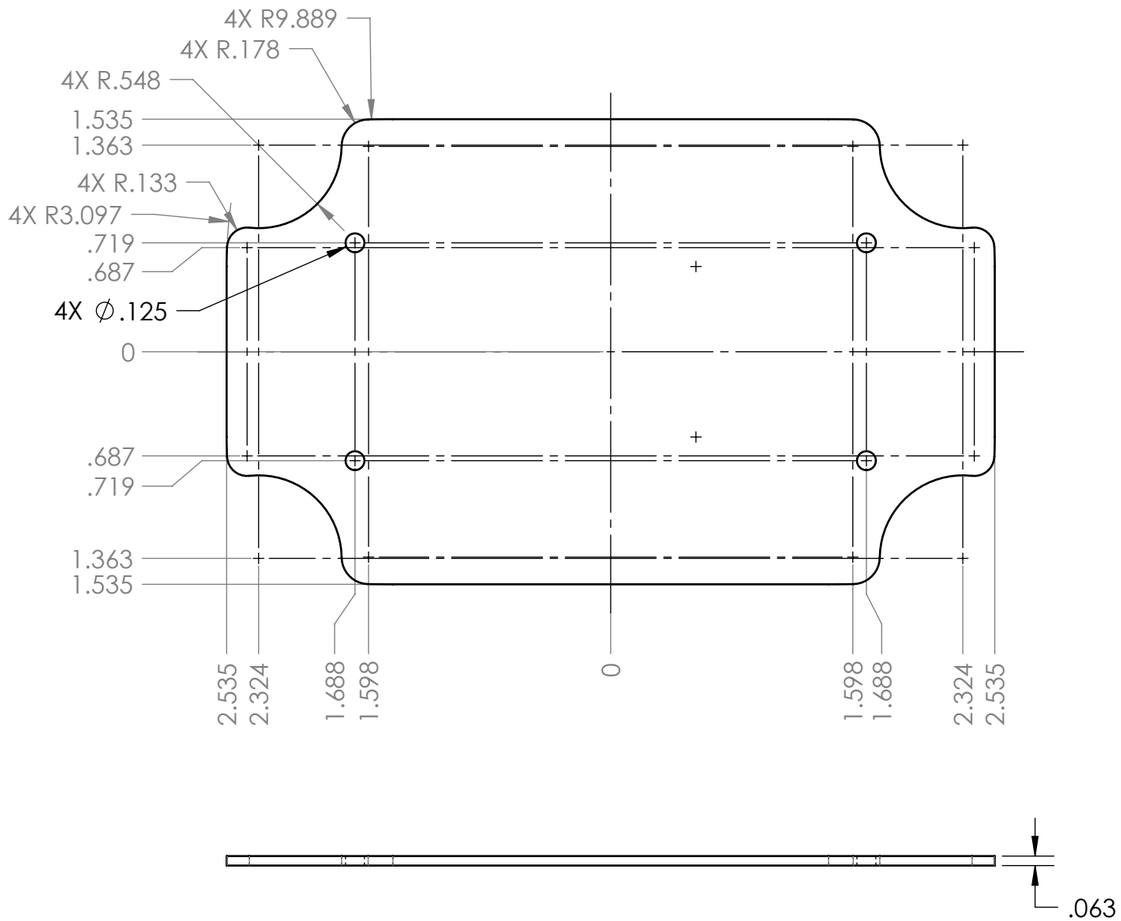

NOTES:
1. PCB SIZES INCLUDE .031 CLEARANCE FROM THE INTERIOR WHEN UTILIZING THE MOUNTING BOSSES FOUND ON THE HD-35BFMB BASE.
2. PCB BOSSES WILL ACCEPT A #4 X .250 LONG THREAD FORMING SCREW (SCREWS AVAILABLE FROM POLYCASE)

REV.	DESCRIPTION	ZONE	BY	APPR'D	DATE
	REVISIONS				
-.01	UPDATED SHEET FORMAT		D.M.F.	D.M.F.	4/8/2011
-	PRELIMINARY RELEASE		D.M.F.	B.M.B.	1/13/2010

UNLESS OTHERWISE SPECIFIED:
DIMENSIONS ARE IN: INCHES[mm]
TOLERANCES: ANGULAR: ±2°
TWO PLACE DECIMAL: ±.010
THREE PLACE DECIMAL: ±.005
PRINTED GRAPHICS: ±.010

PROPRIETARY AND CONFIDENTIAL
THE INFORMATION CONTAINED IN THIS DRAWING IS THE SOLE PROPERTY OF POLYCASE. ANY REPRODUCTION IN PART OR AS A WHOLE WITHOUT THE WRITTEN PERMISSION OF POLYCASE IS PROHIBITED.

CAD FILE: HD-35B-PCB

PART NO.
HD-35B-PCB

MATERIAL

FLAME RATING

	NAME	DATE
DRAWN	D.M.F.	12/14/2009
CHECKED	B.M.B.	1/13/2010

SIZE **B**

SCALE: 1:1

polycase
1305 CHESTER IND. PARKWAY AVON, OHIO 44011-1083 U.S.A.
PH#: 1-800-248-1233, 440-934-0444 FAX#: 440-934-0088

PCB TEMPLATE FOR HD-35BFMB

REV **-.01**

SHEET 1 OF 1

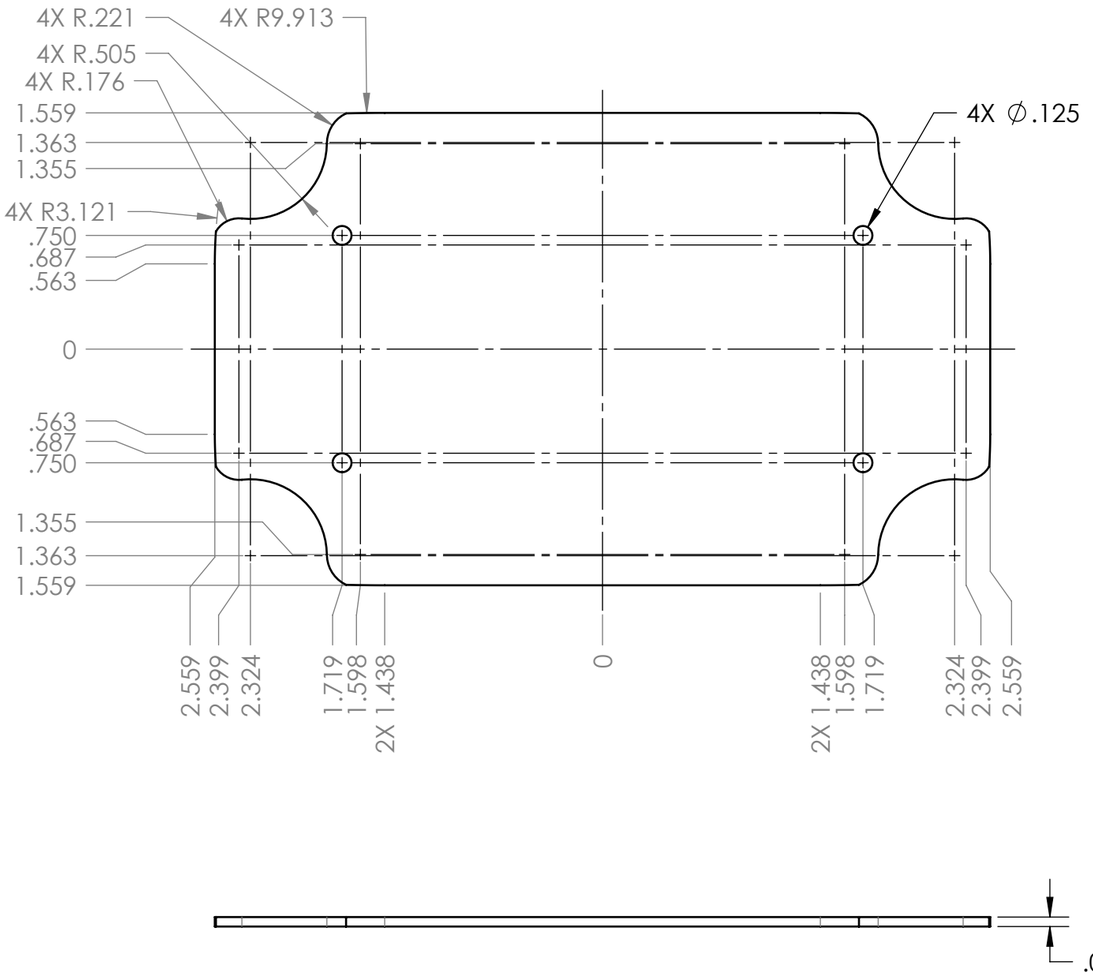

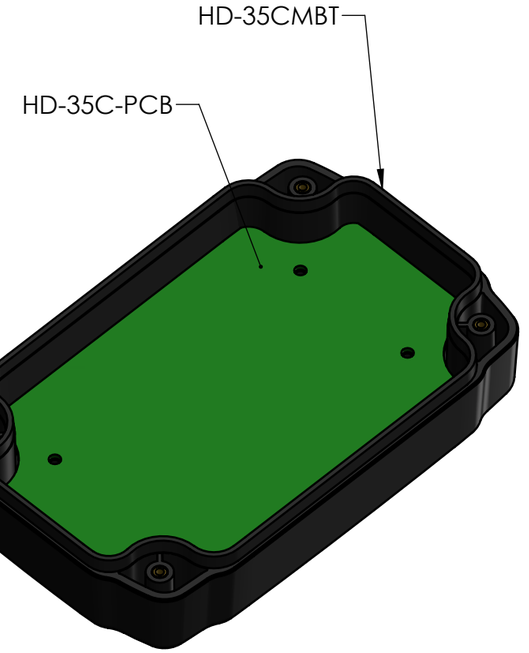

NOTES:
1. PCB SIZES INCLUDE .031 CLEARANCE FROM INNER WALLS AND SCREW TOWERS WHEN UTILIZING THE MOUNTING BOSSES FOUND ON THE HD-35CMBT COVER
2. PCB BOSSES WILL ACCEPT A #4 X .250 LONG THREAD FORMING SCREW (SCREWS AVAILABLE FROM POLYCASE)

REV.	DESCRIPTION	ZONE	BY	APPR'D	DATE
-.01	UPDATED SHEET FORMAT				4/8/2011
-	PRELIMINARY RELEASE		D.M.F.	B.M.B.	1/13/2010
REVISIONS					

UNLESS OTHERWISE SPECIFIED:
DIMENSIONS ARE IN: INCHES[mm]
TOLERANCES: ANGULAR: ±2°
TWO PLACE DECIMAL: ±.010
THREE PLACE DECIMAL: ±.005
PRINTED GRAPHICS: ±.010

PROPRIETARY AND CONFIDENTIAL
THE INFORMATION CONTAINED IN THIS DRAWING IS THE SOLE PROPERTY OF POLYCASE. ANY REPRODUCTION IN PART OR AS A WHOLE WITHOUT THE WRITTEN PERMISSION OF POLYCASE IS PROHIBITED.

CAD FILE: HD-35C-PCB

PART NO.
HD-35C-PCB

MATERIAL

FLAME RATING

	NAME	DATE
DRAWN	D.M.F.	12/14/2009
CHECKED	B.M.B.	1/13/2010

polycase
1305 CHESTER IND. PARKWAY AVON, OHIO 44011-1083 U.S.A.
PH#: 1-800-248-1233, 440-934-0444 FAX#: 440-934-0088

SIZE B

PCB TEMPLATE FOR HD-35CMBT

REV -.01

SCALE: 1:1

SHEET 1 OF 1