PART NUMBER: AL-23BP-01
MATERIAL: ALUMINUM ADC12
COLOR: NATURAL

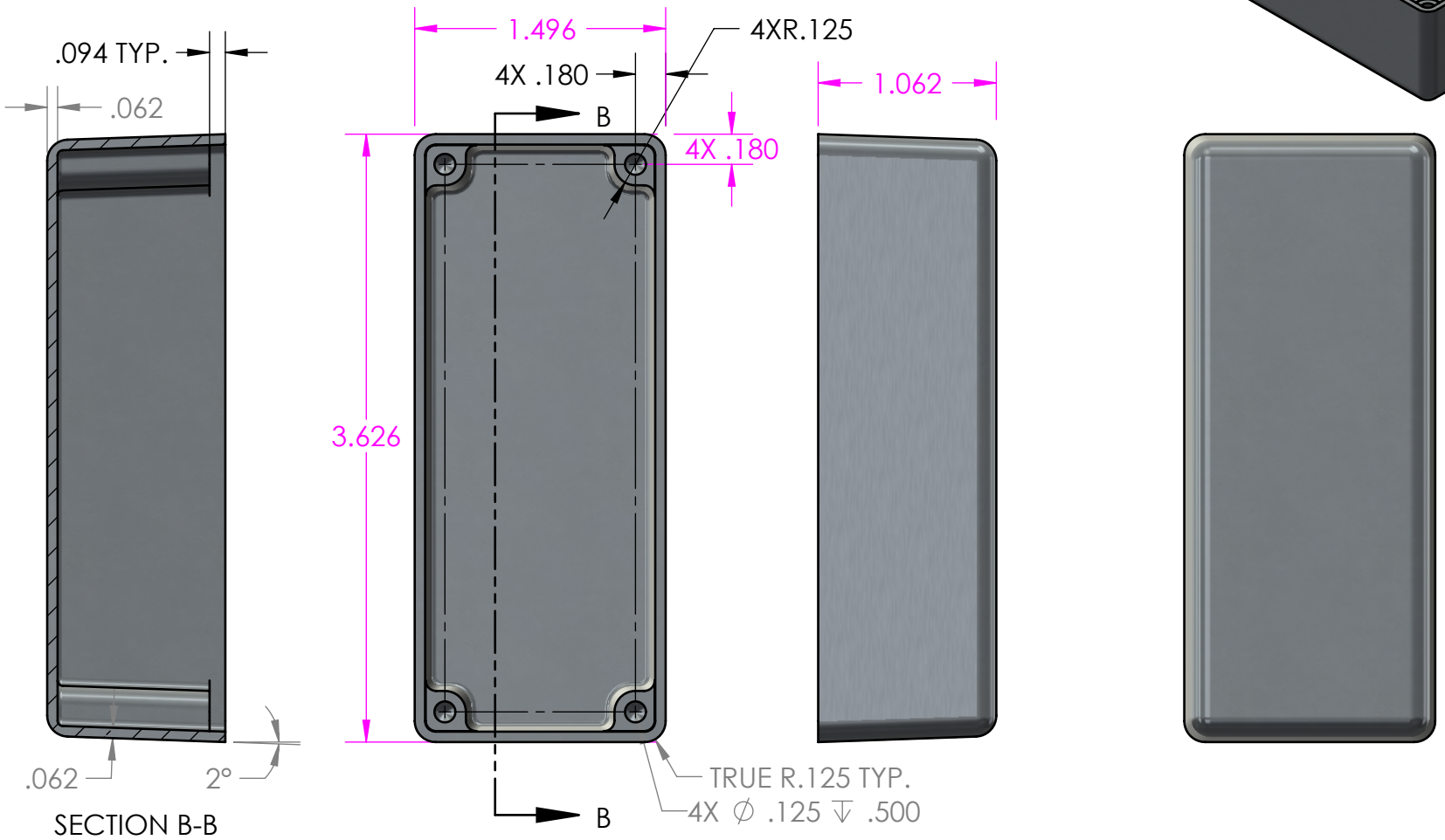

UNLESS OTHERWISE SPECIFIED:
DIMENSIONS ARE IN: INCHES[mm]
TOLERANCES: ANGULAR: ±-°
TWO PLACE DECIMAL: ±-
THREE PLACE DECIMAL: ±-
PRINTED GRAPHICS: ±-

PROPRIETARY AND CONFIDENTIAL
THE INFORMATION CONTAINED IN THIS DRAWING IS THE SOLE PROPERTY OF POLYCASE. ANY REPRODUCTION IN PART OR AS A WHOLE WITHOUT THE WRITTEN PERMISSION OF POLYCASE IS PROHIBITED.

CAD FILE: AL-23BP

PART NO.
AL-23BP-01

MATERIAL
ALUMINUM ADC12

FLAME RATING

	NAME	DATE
DRAWN	D.M.F.	11/30/2017
CHECKED	C.C.B.	12/21/2017

SIZE
A

polycase
1305 CHESTER IND. PARKWAY AVON, OHIO 44011-1083 U.S.A.
PH#: 1-800-248-1233, 440-934-0444 FAX#: 440-934-0088

Die Cast Aluminum Base

REV
-

SCALE: 1:1

SHEET 1 OF 1

REV.	DESCRIPTION	ZONE	BY	APPR'D	DATE
	REVISIONS				