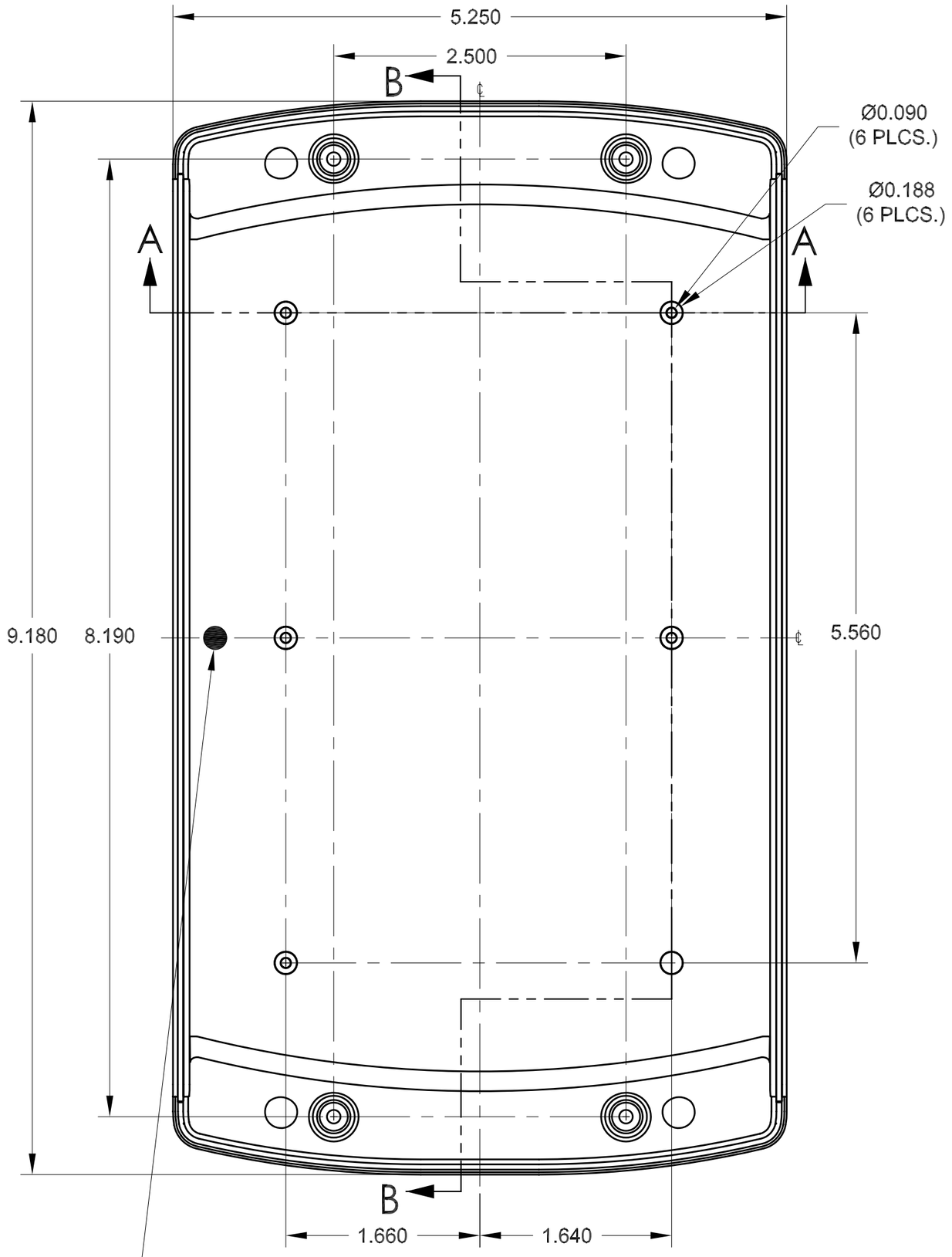


PLASTIC INJECTION GATE LOCATION HERE
(GATE LOCATION MUST BE SPECIFIED WHEN MACHINING BASE)

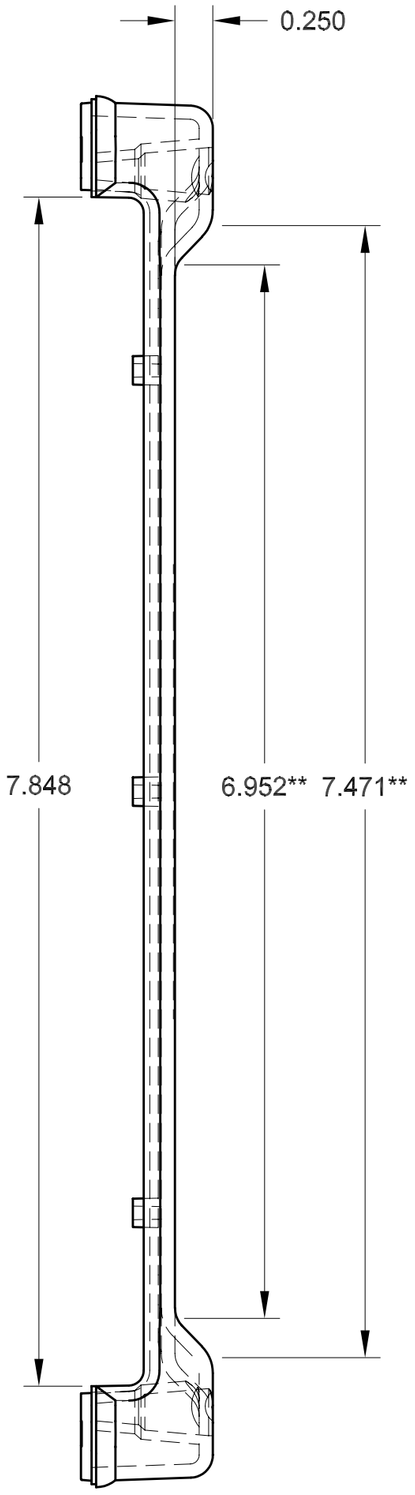


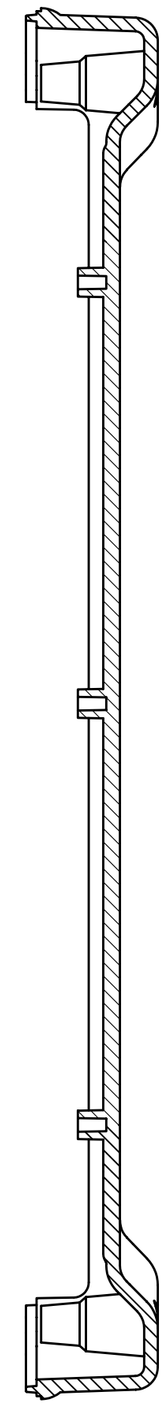

SECTION B-B

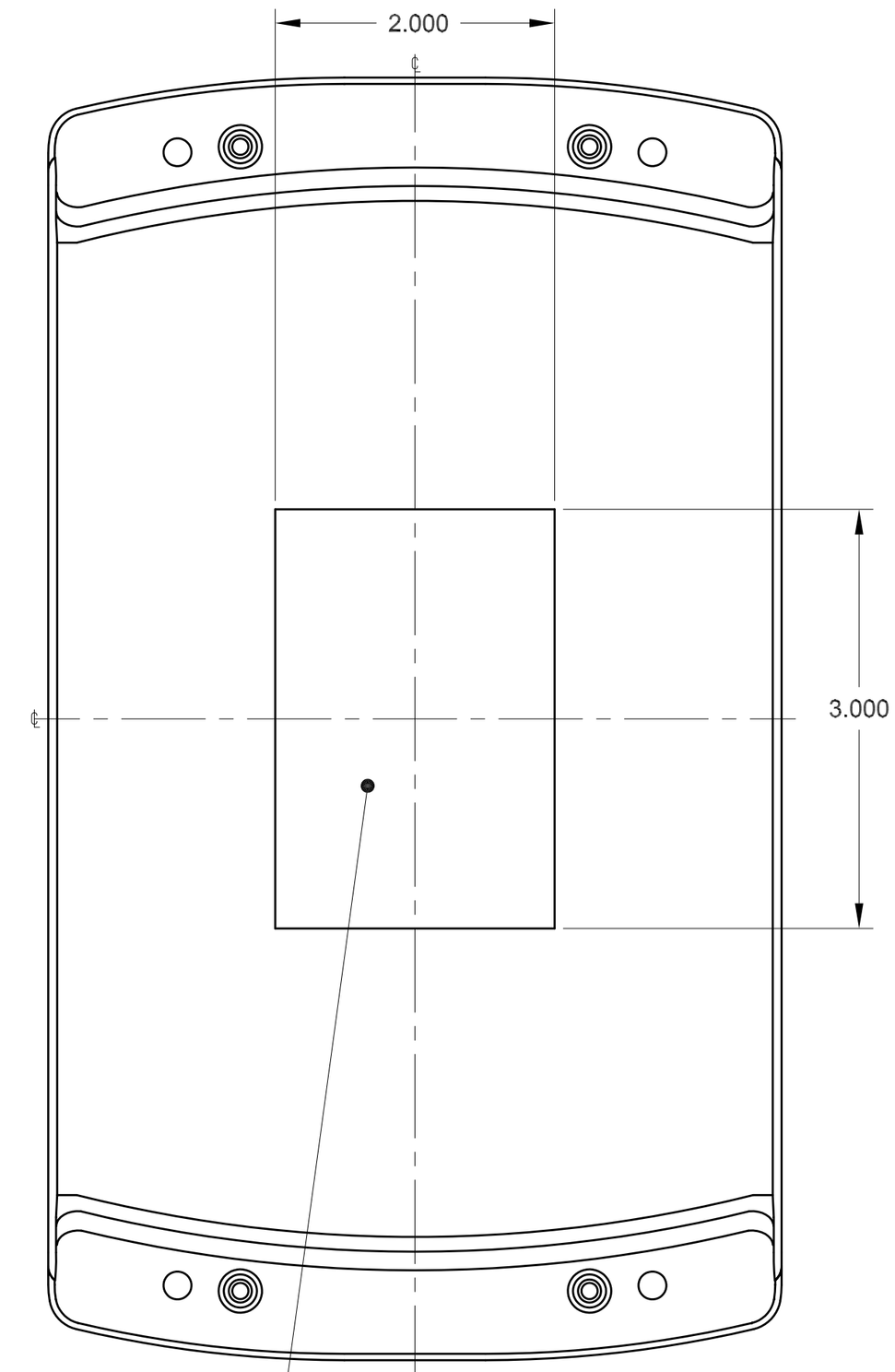


TEXTURED RECESS ▽0.010

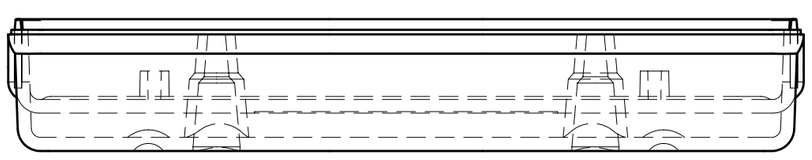

SECTION A-A

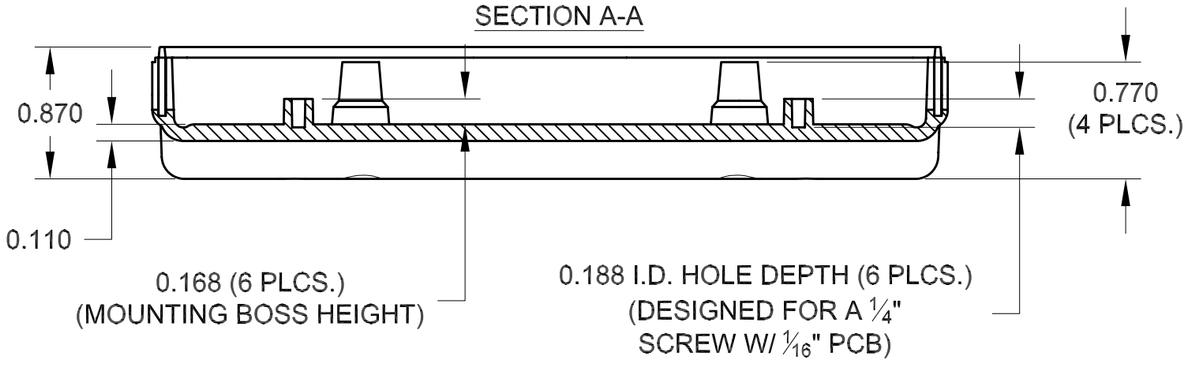


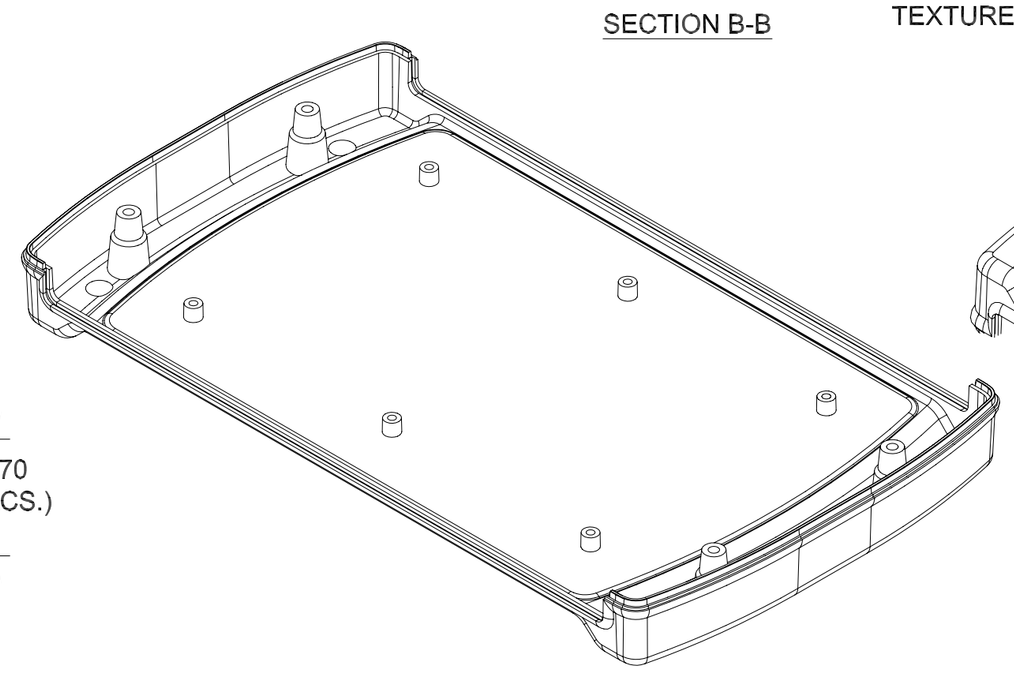

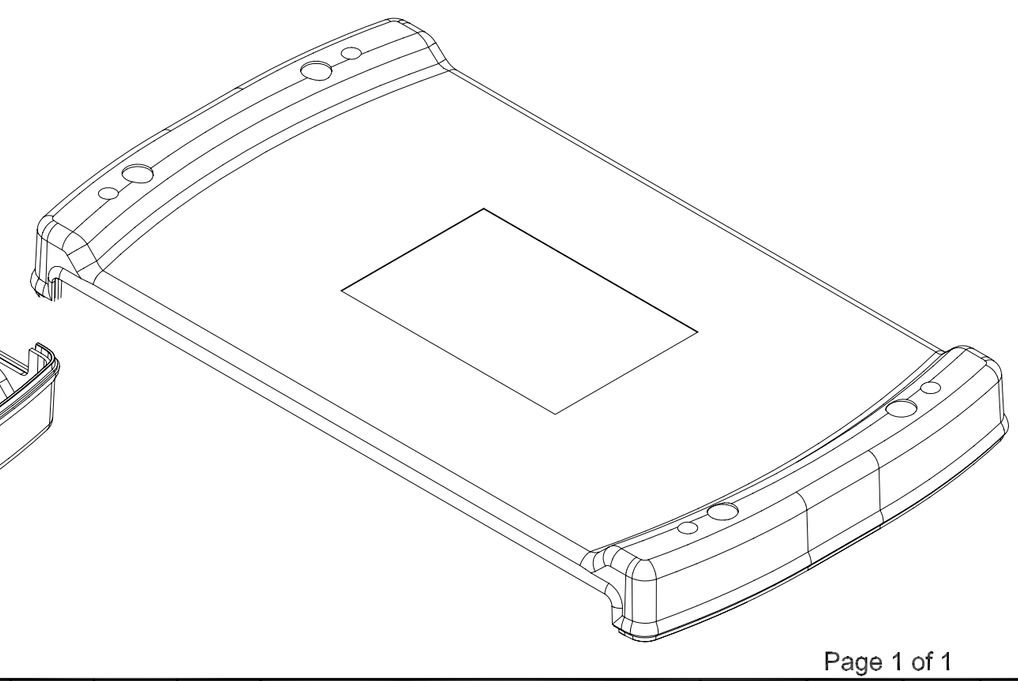

NOTES:
1.) ** DIMENSIONS TO THEORETICAL SHARP CORNER
2.) PC BOARD WILL ACCEPT A #4X1/4 THREAD FORMING SCREW
(**SCREWS AVAILABLE FROM POLYCASE**)
3.) DIMENSIONS SUBJECT TO CHANGE

| REV | DESCRIPTION | BY | CHK | DATE |
|---|---|---|---|---|
| | | | | |

POLYCASE™ YOUR PERFECT FIT

TOLERANCES UNLESS OTHERWISE SPECIFIED
X.XX ±.045
X.XXX ±.030

1305 CHESTER IND. PARKWAY AVON, OHIO 44011 U.S.A.
PH# 1-800-246-1233, 440-934-0444 FAX# 440-934-0095

THIS DRAWING AND THE INFORMATION CONTAINED ARE THE PROPERTY OF POLYCASE AND IT IS NOT TO BE REPRODUCED, COPIED OR USED IN ANY WAY DETRIMENTAL TO THE INTEREST OF POLYCASE.

| DRWN BY | APP. BY | SCALE | DATE: |
|---|---|---|---|
| D.F. | B.B. | FULL | 8/23/05 |

JOB NO: ZN-40BMB
PRODUCT: -
CUSTOMER: -

TITLE: Secondary Operations Drawing

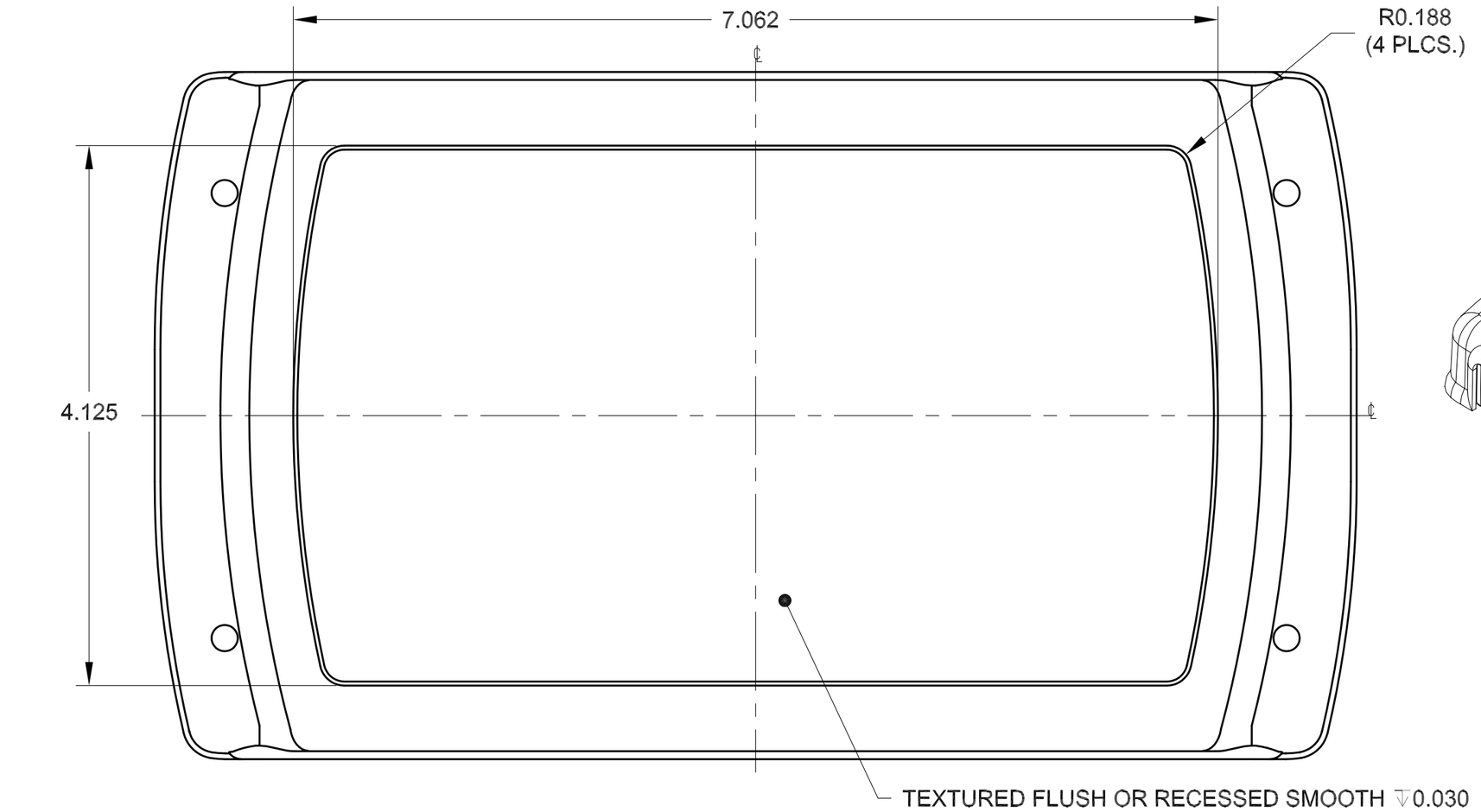


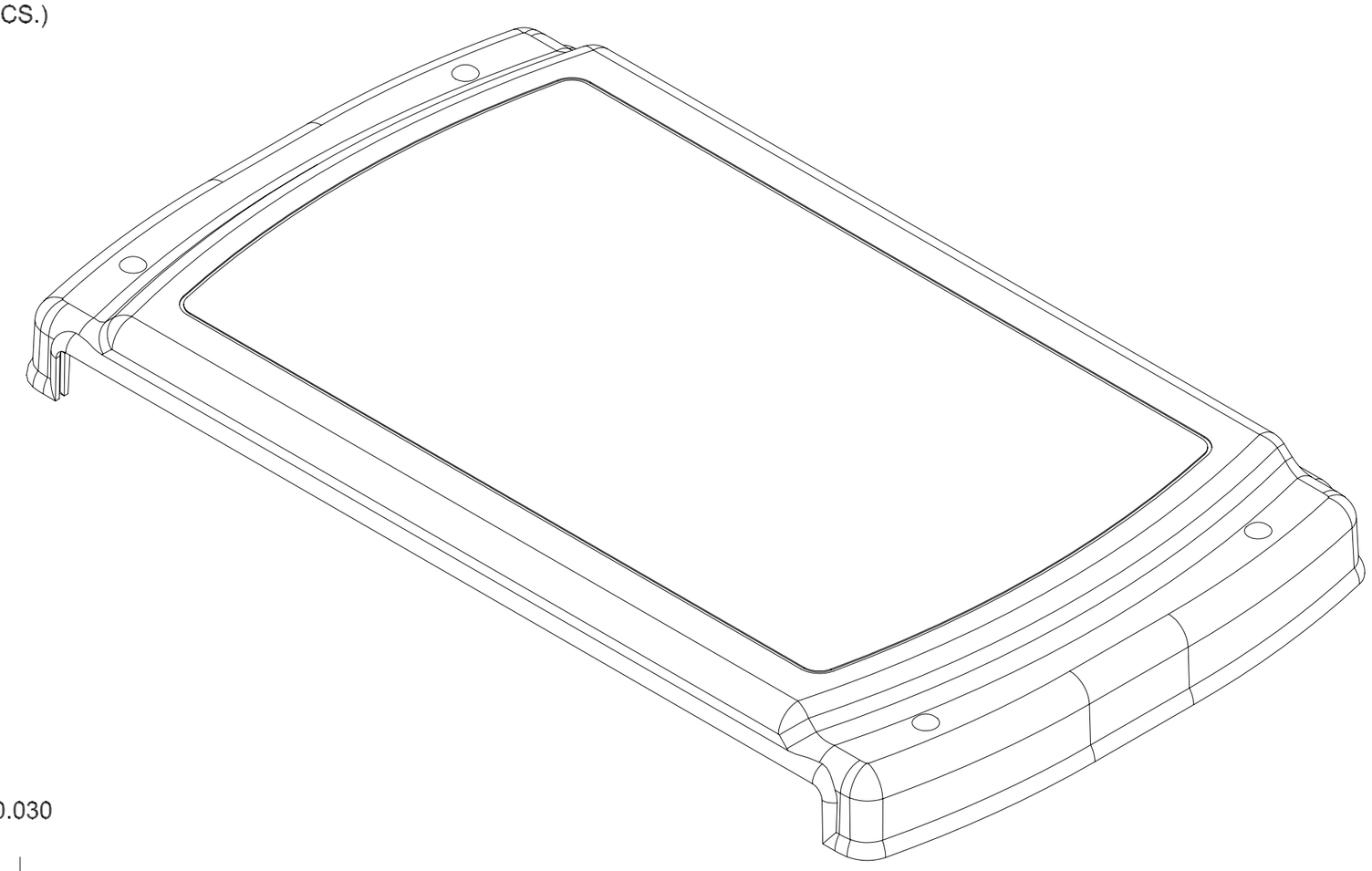

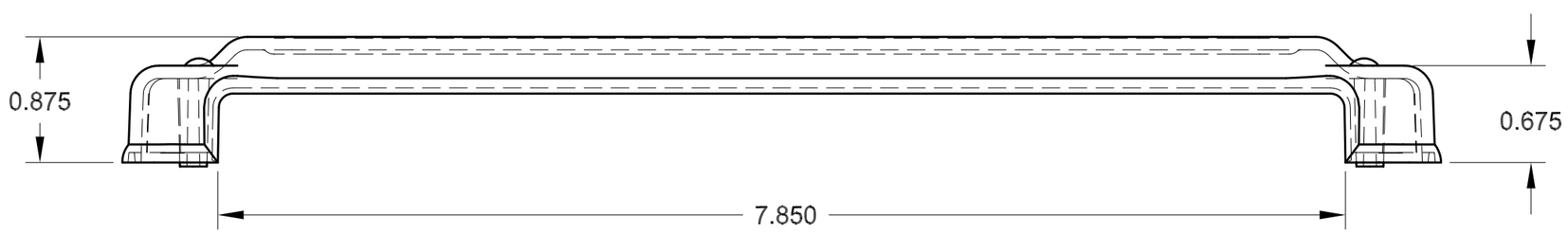


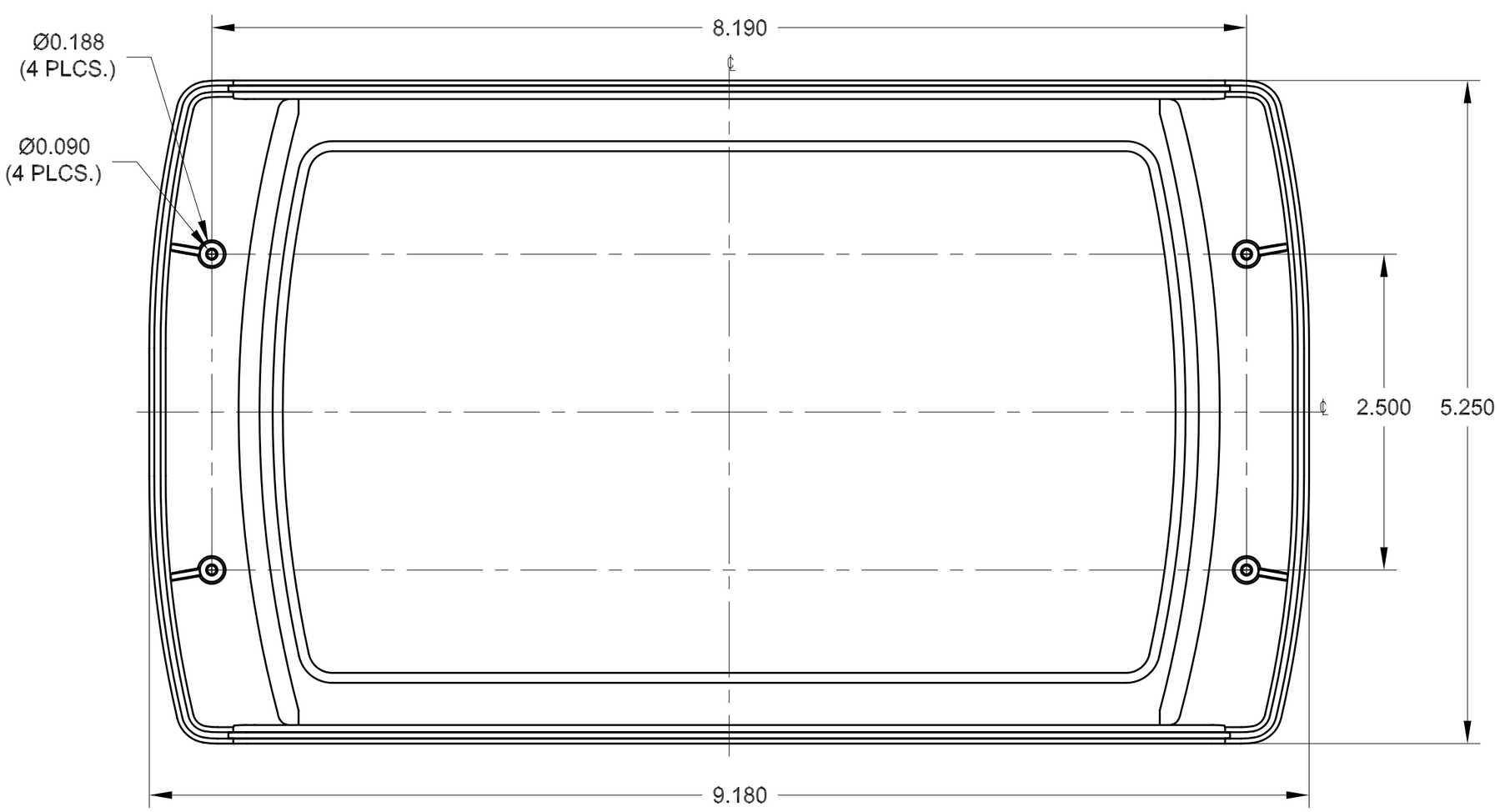


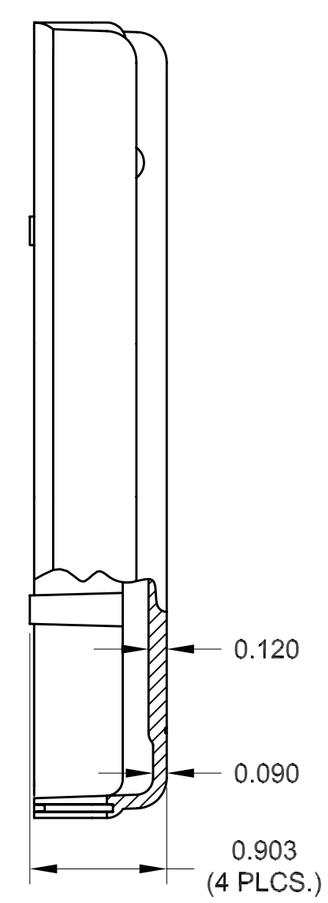


NOTES:
1.) DIMENSIONS SUBJECT TO CHANGE

| REV | DESCRIPTION | BY | CHK | DATE |
|---|---|---|---|---|
| | | | | |
| | | | | |
| | | | | |
| | | | | |
| | | | | |

POLYCASE™
YOUR PERFECT FIT

TOLERANCES UNLESS OTHERWISE SPECIFIED
X.XX ±.045
X.XXX ±.030

1305 CHESTER IND. PARKWAY AVON, OHIO 44011 U.S.A.
PH# 1-800-248-1233, 440-934-0444 FAX# 440-934-0088

THIS DRAWING AND THE INFORMATION CONTAINED ARE THE PROPERTY OF POLYCASE AND IT IS NOT TO BE REPRODUCED, COPIED OR USED IN ANY WAY DETRIMENTAL TO THE INTEREST OF POLYCASE.



| DRWN BY | APP. BY | SCALE | DATE: |
|---|---|---|---|
| D.F. | B.B. | FULL | 8/23/05 |

JOB NO: - -
PRODUCT: - ZN-40C
CUSTOMER:
TITLE: PRODUCT DETAIL DRAWING

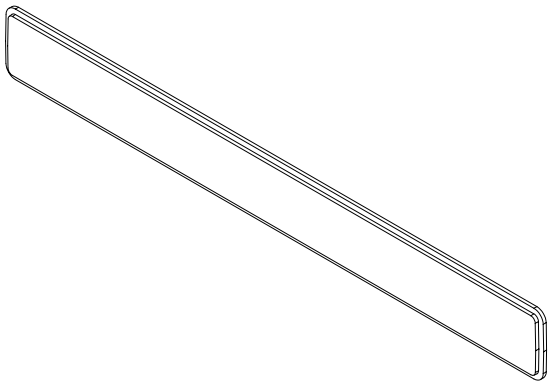

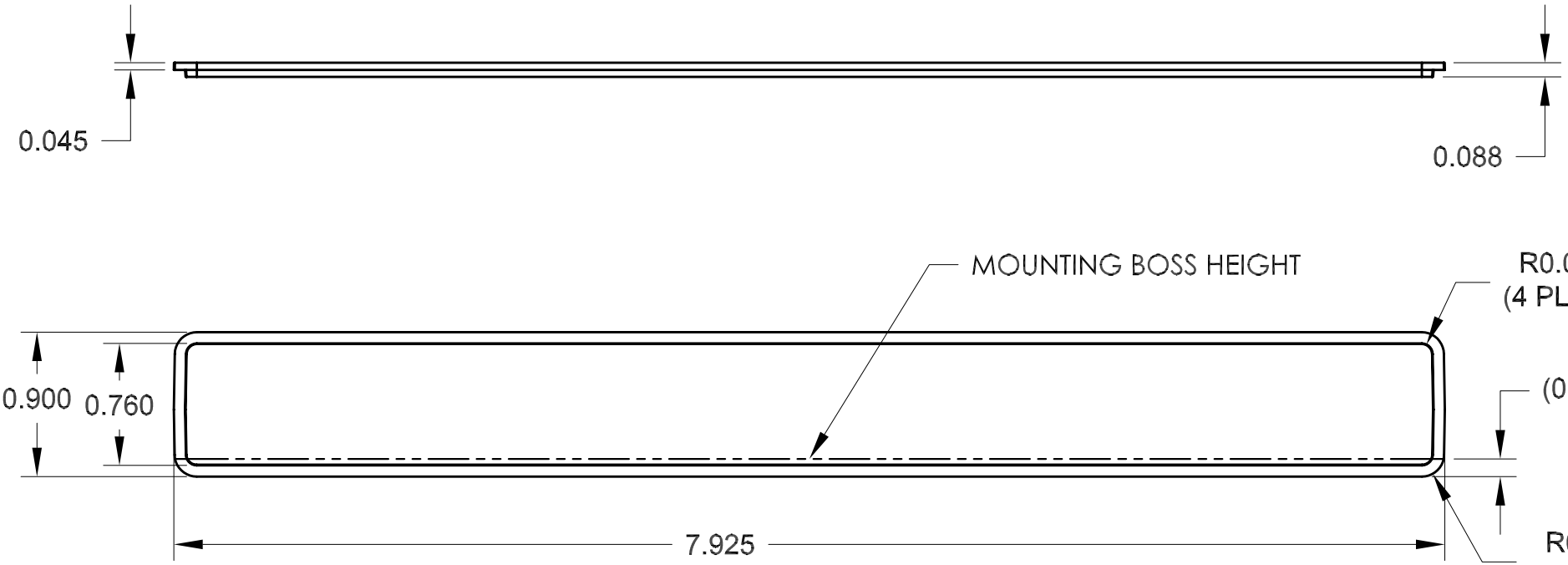




| REV | DESCRIPTION | BY | CHK | DATE |
|---|---|---|---|---|
| | | | | |
| | | | | |
| | | | | |
| | | | | |
| | | | | |

POLYCASE™
YOUR PERFECT FIT

TOLERANCES UNLESS OTHERWISE SPECIFIED
X.XX ±.045
X.XXX ±.030

1305 CHESTER IND. PARKWAY AVON, OHIO 44011 U.S.A.
PH# 1-800-248-1233, 440-934-0444 FAX# 440-934-0088

THIS DRAWING AND THE INFORMATION CONTAINED ARE THE PROPERTY OF POLYCASE AND IT IS NOT TO BE REPRODUCED, COPIED OR USED IN ANY WAY DETRIMENTAL TO THE INTEREST OF POLYCASE.

| DRWN BY | APP. BY | SCALE | DATE: |
|---|---|---|---|
| D.F. | B.B. | FULL | 8/23/05 |

JOB NO: - -

PRODUCT: ZN-40EP -

CUSTOMER:

TITLE: PRODUCT DETAIL DRAWING