BOM Table						
ITEM NO.	PART NUMBER	Rev.	Description	Material	Color	EX-50-01/QTY.
1	EX-50B-01	-	EXTRUDED BODY, AL, BLACK	6063-T6	BLACK	1
2	EX-50E-01	-	END CAP, AL, BLACK	ALUMINUM ADC12	BLACK	2
3	EX-50G	-	EX GASKET	NEOPRENE	BLACK	2
4	EX-01A	-	ADHESIVE BUMPER	RUBBER	BLACK	4
5	EX-01W	-	WASHER	PC	CLEAR	8
6	EX-01S-01		M3.5-0.6 X 12 PHIL, PAN HD. SCREW	SST		8

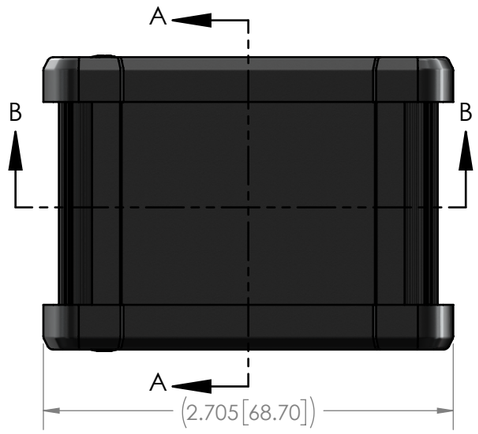

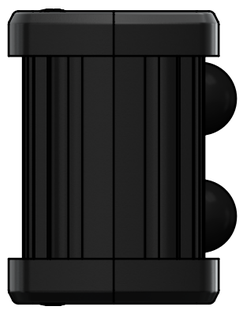

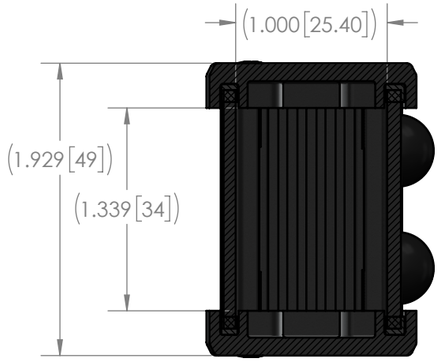

SECTION A-A

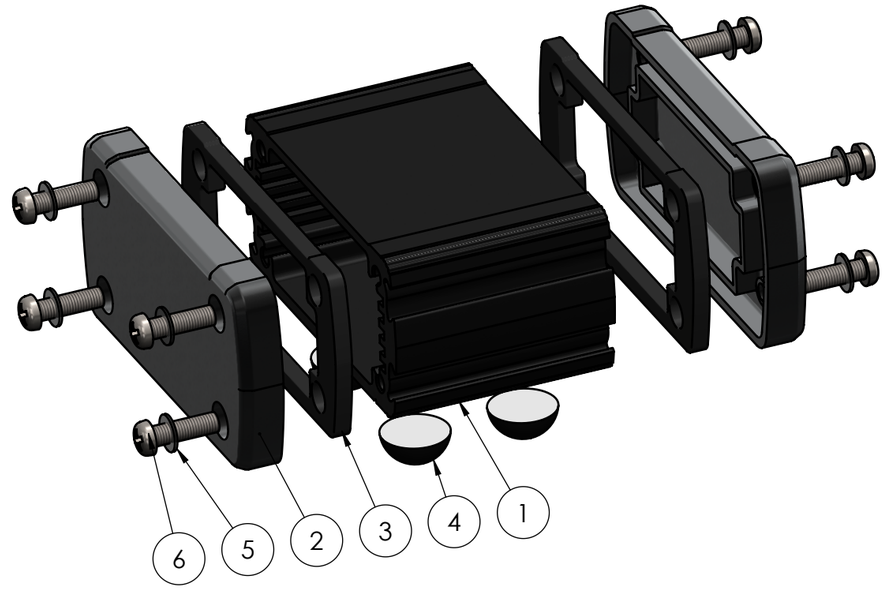

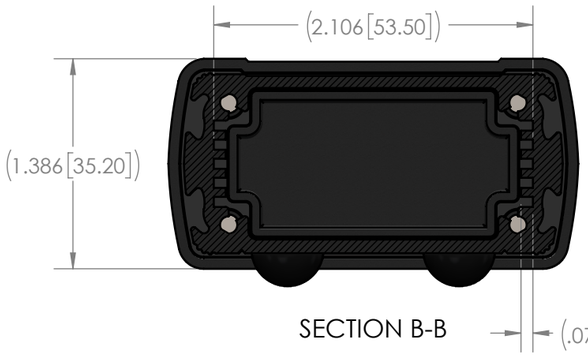

SECTION B-B (.079[2])

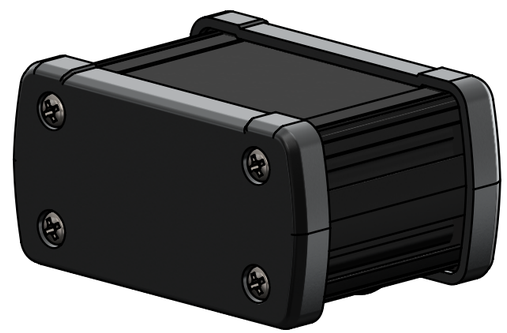

REVISIONS					
REV.	DESCRIPTION	ZONE	BY	APPR'D	DATE

UNLESS OTHERWISE SPECIFIED:
DIMENSIONS ARE IN: INCHES[mm]
TOLERANCES: ANGULAR: ±2°
TWO PLACE DECIMAL: ±.010
THREE PLACE DECIMAL: ±.005
PRINTED GRAPHICS: ±.010

PROPRIETARY AND CONFIDENTIAL
THE INFORMATION CONTAINED IN THIS DRAWING IS THE SOLE PROPERTY OF POLYCASE. ANY REPRODUCTION IN PART OR AS A WHOLE WITHOUT THE WRITTEN PERMISSION OF POLYCASE IS PROHIBITED.

CAD FILE: EX-50

PART NO.
EX-50-01

MATERIAL

FLAME RATING

	NAME	DATE
DRAWN	D.M.F.	8/1/2017
CHECKED	C.C.B.	8/29/2017

SIZE
B

REV
-

SCALE: 1:1

SHEET 1 OF 1

polycase
1305 CHESTER IND. PARKWAY AVON, OHIO 44011-1083 U.S.A.
PH#: 1-800-248-1233, 440-934-0444 FAX#: 440-934-0088

	LENGTH (mm)	DESCRIPTION	COLOR	MATERIAL
EX-50B-01	40	EXTRUDED BODY, AL, BLACK	BLACK	6063-T6
EX-51B-01	76	EXTRUDED BODY, AL, BLACK	BLACK	6063-T6
EX-52B-01	120	EXTRUDED BODY, AL, BLACK	BLACK	6063-T6

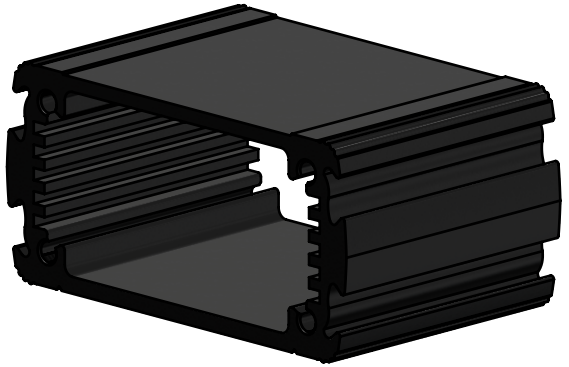

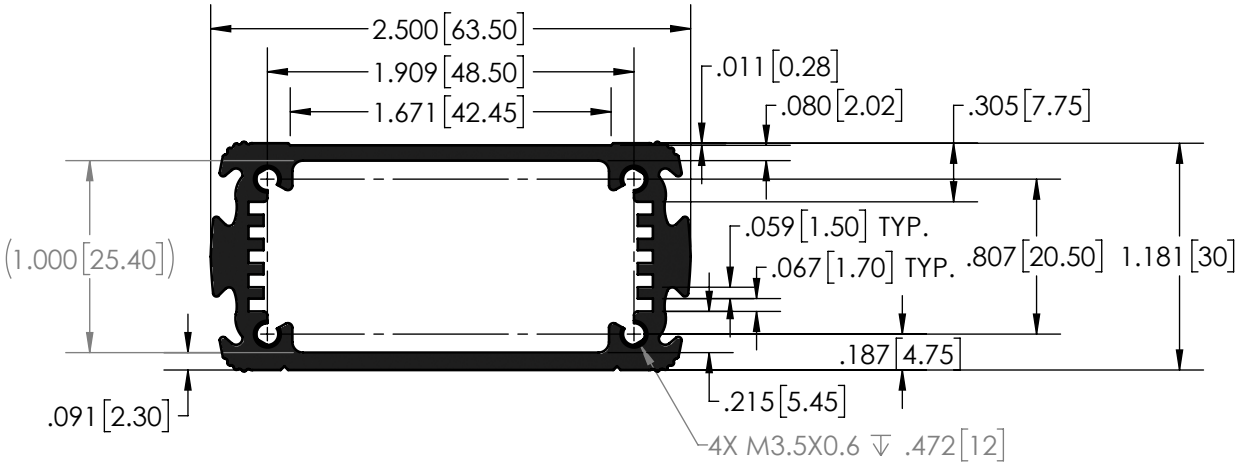

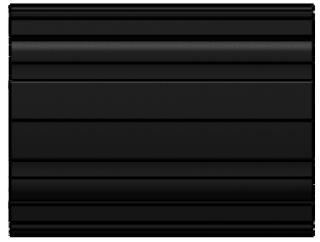

UNLESS OTHERWISE SPECIFIED:
DIMENSIONS ARE IN: INCHES[mm]
TOLERANCES: ANGULAR: ±-°
TWO PLACE DECIMAL: ±-
THREE PLACE DECIMAL: ±-
PRINTED GRAPHICS: ±-

PROPRIETARY AND CONFIDENTIAL
THE INFORMATION CONTAINED IN THIS DRAWING IS THE SOLE PROPERTY OF POLYCASE. ANY REPRODUCTION IN PART OR AS A WHOLE WITHOUT THE WRITTEN PERMISSION OF POLYCASE IS PROHIBITED.

CAD FILE: EX-50B-52B

PART NO.
AS NOTED

MATERIAL
-

FLAME RATING

	NAME	DATE
DRAWN	D.M.F.	8/1/2017
CHECKED	C.C.B.	8/29/2017

SIZE
A

EXTRUDED BODY, AL, BLACK

REV
-

SCALE: 1:1

SHEET 1 OF 1

polycase
1305 CHESTER IND. PARKWAY AVON, OHIO 44011-1083 U.S.A.
PH#: 1-800-248-1233, 440-934-0444 FAX#: 440-934-0088

REV.	DESCRIPTION	ZONE	BY	APPR'D	DATE
REVISIONS					

D C B A

5 4 3 2 1

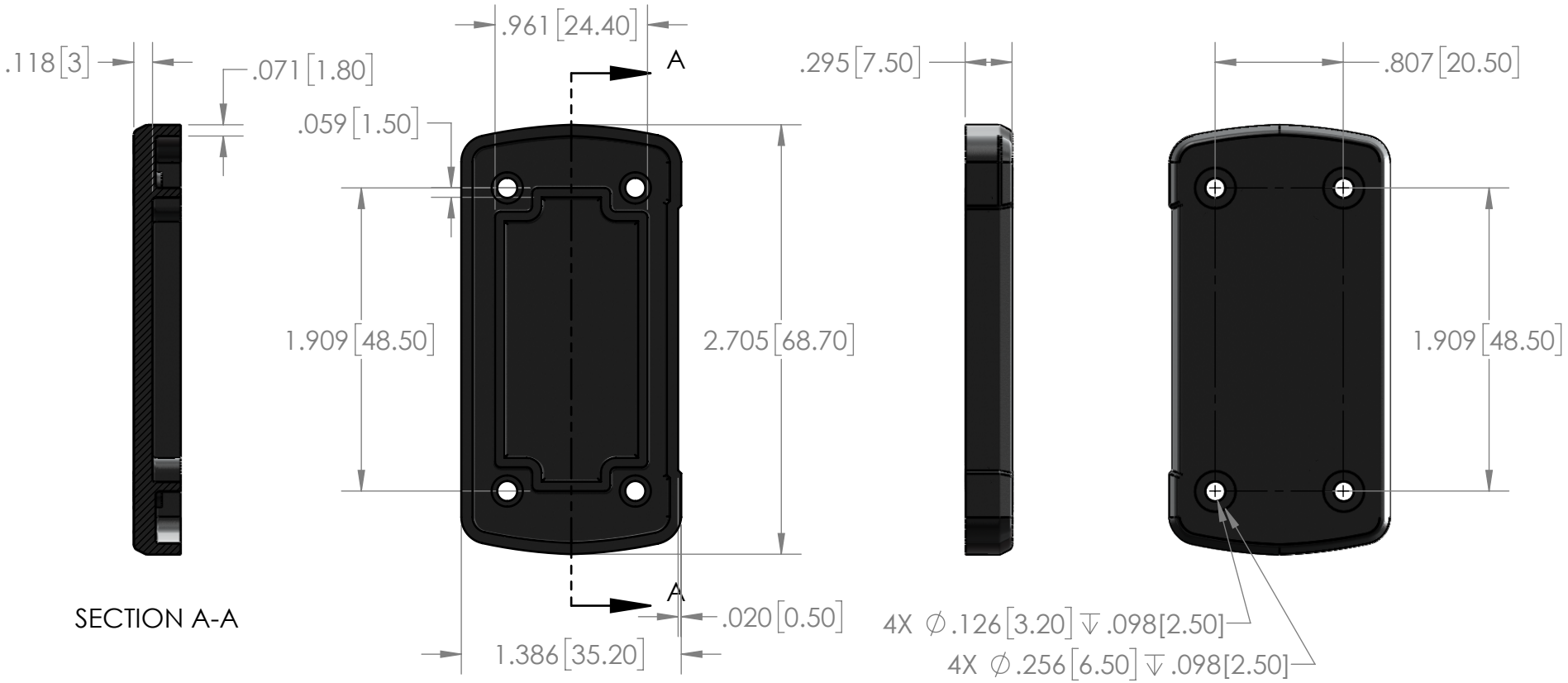

REV.	DESCRIPTION	ZONE	BY	APPR'D	DATE
REVISIONS					

UNLESS OTHERWISE SPECIFIED:
DIMENSIONS ARE IN: INCHES[mm]
TOLERANCES: ANGULAR: ±2°
TWO PLACE DECIMAL: ±.010
THREE PLACE DECIMAL: ±.005
PRINTED GRAPHICS: ±.010

PROPRIETARY AND CONFIDENTIAL
THE INFORMATION CONTAINED IN THIS DRAWING IS THE SOLE PROPERTY OF POLYCASE. ANY REPRODUCTION IN PART OR AS A WHOLE WITHOUT THE WRITTEN PERMISSION OF POLYCASE IS PROHIBITED.

CAD FILE: EX-50E

PART NO.
EX-50E-01

MATERIAL
ALUMINUM ADC12

FLAME RATING

	NAME	DATE
DRAWN	D.M.F.	8/1/2017
CHECKED	C.C.B.	8/29/2017

polycase
1305 CHESTER IND. PARKWAY AVON, OHIO 44011-1083 U.S.A.
PH#: 1-800-248-1233, 440-934-0444 FAX#: 440-934-0088

SIZE
A

END CAP, AL, BLACK

REV
-

SCALE: 1:1

SHEET 1 OF 1

5 4 3 2 1

D C B A